THIS DRAWING IS UNPUBLISHED. RELEASED FOR PUBLICATION -,- .
© COPYRIGHT - BY TYCO ELECTRONICS CORPORATION. ALL RIGHTS RESERVED.

LOC	DIST
AD	00

REVISIONS

P	LTR	DESCRIPTION	DATE	DWN	APVD
	D	REVISED PER ECO-10-008084	26APR10	HMR	JG

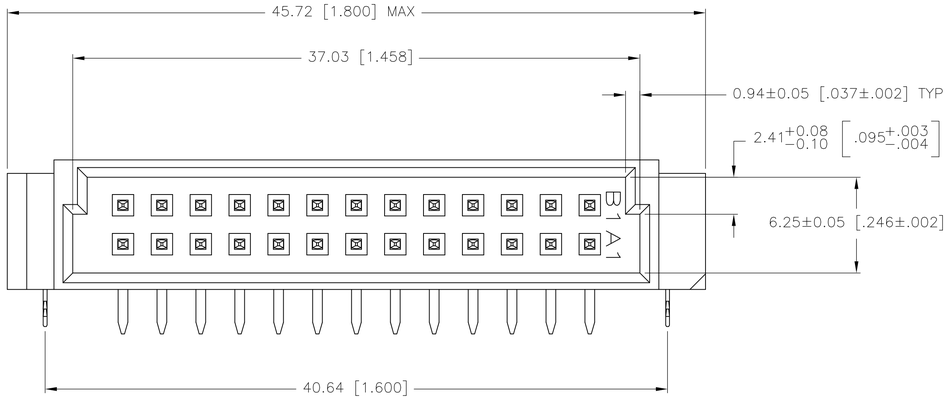

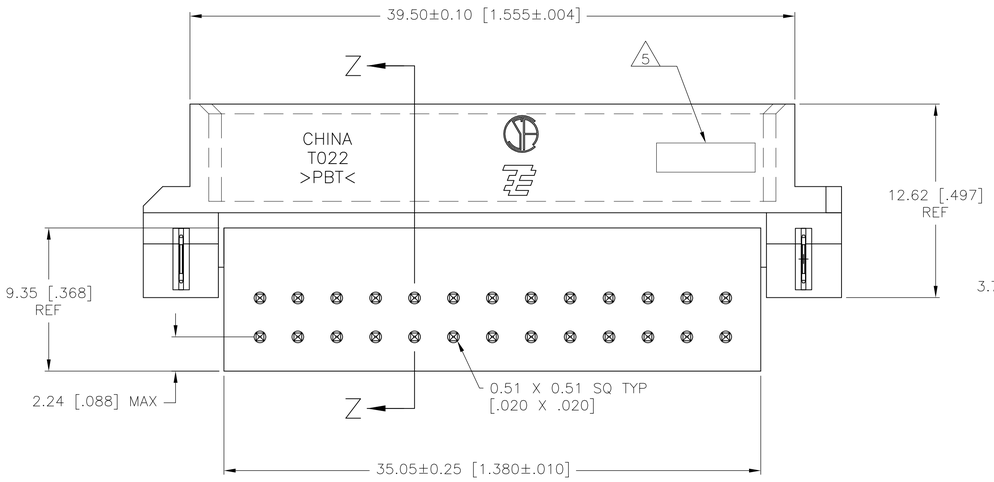

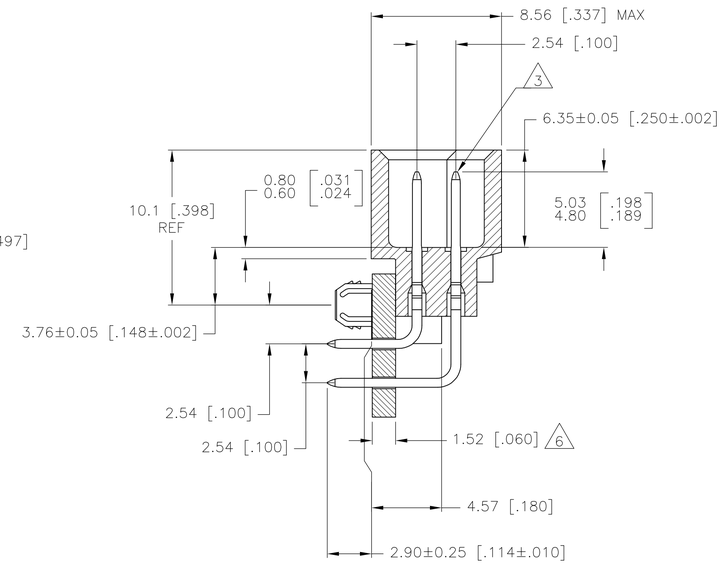

SECTION Z–Z

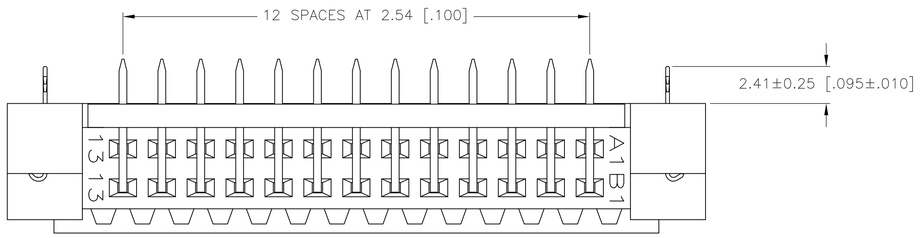

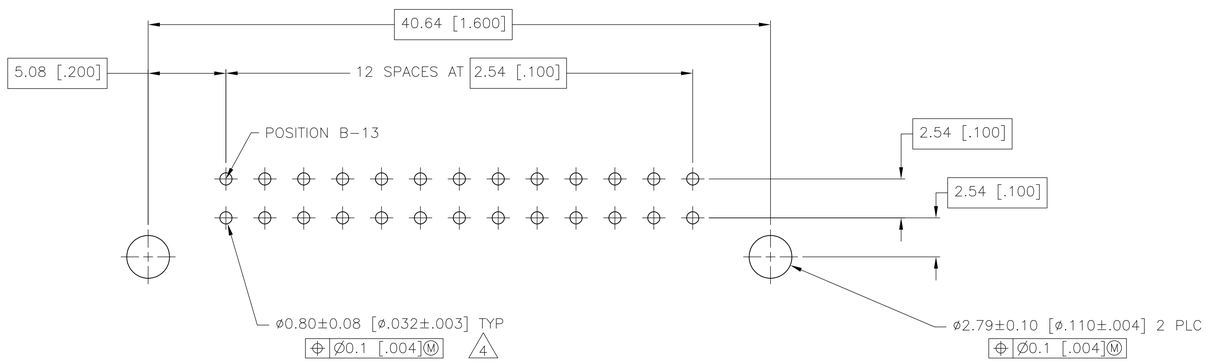

PC BOARD LAYOUT

1. HOUSING MATERIAL: GLASS FILLED POLYESTER, COLOR: GRAY.
2. POST MATERIAL: BRASS
3. POST FINISH: 0.00076[.000030] MIN GOLD IN MATING AREA, 0.00254–0.00508[.000100–.000200] TIN–LEAD ON SOLDERTAILS, ALL OVER 0.00127[.000050] MIN NICKEL.
4. RECOMMENDED HOLE SIZE FOR MANUAL APPLICATION OF CONNECTOR ONTO PC BOARD.
5. PART NUMBER, DATE CODE MARKED ON OPPOSITE SIDE, THIS APPROX AREA.
6. FERRITE STRIP.
7. CURRENT RATING – 2 AMPS MAXIMUM PER CONTACT.
8. POST FINISH: 0.00076[.000030] MIN GOLD IN MATING AREA, 0.00254–0.00508[.000100–.000200] MATTE TIN ON SOLDERTAILS, ALL OVER 0.00127[.000050] MIN NICKEL.

	FINISH	NO. OF POSN	PART NUMBER
SUPERSEDED BY 5–1571434–1	8	26	5–1571434–1
	3	26	1571434–1

THIS DRAWING IS A CONTROLLED DOCUMENT.

DIMENSIONS: mm

TOLERANCES UNLESS OTHERWISE SPECIFIED:
0 PLC ± –
1 PLC ± –
2 PLC ± 0.13 [.005]
3 PLC ± –
4 PLC ± –
ANGLES ± –

MATERIAL 1 2

FINISH SEE TABLE

DWN R BROWN 03FEB03
CHK J GESFORD 03FEB03
APVD J GESFORD 03FEB03
PRODUCT SPEC —
APPLICATION SPEC —
WEIGHT —

Tyco Electronics
Tyco Electronics Corporation
Harrisburg, PA 17105–3608

NAME HEADER ASSEMBLY, EUROCARD, TYPE B, RIGHT ANGLE, WITH BOARD LOCKS, AND FERRITE STRIP

SIZE	CAGE CODE	DRAWING NO	RESTRICTED TO
A1	00779	C-1571434	—

CUSTOMER DRAWING | SCALE 5:1 | SHEET 1 OF 1 | REV D

Mouser Electronics

Authorized Distributor

Click to View Pricing, Inventory, Delivery & Lifecycle Information:

TE Connectivity:

5-1571434-1