SPECIFICATION FOR
CONNECTOR USED FOR FPC WITH 0.5mm CONTACT SPACING
COPING WITH AUTOMATIC MOUNTING & SMT
SFV_ _R-1/2ST_E_HLF

1. SCOPE

This specification covers the requirements for the connector (SFV_ _R-1/2ST_E_HLF) with 0.5mm spacing to which the edge of FPC(Flexible Printed Circuit) can be connected by Zero-Insertion-Force method and which copes with automatic mounting and SMT.

2. APPLICABLE STANDARDS

JIS C 5402	Method for Test of Connectors for Electronic Equipment
JIS C 0806	Packing of Electronic Components on Continuous Tapes (Surface Mount Components)
UL – 94	TESTS FOR FLAMMABILITY OF PLASTIC MATERIALS FOR PARTS IN DEVICES AND APPLIANCES.

3. CATALOG No. STRUCTURE

SFV 20 R – 1 ST _ E1 HLF

- Series — SFV
- Number of Contacts — 20
- Right Angle — R
- For FPC, Contact direction — 1
  - 1 : Lower contact type
  - 2 : Upper contact type
- Cope with automatic mounting & SMT — ST
- Plating Variation — _
  - B : Gold plating with Ni dam
- Plastic Tape Packaging — E1
- Halogen and Lead Free — HLF

4. CONNECTOR SHAPE, DIMENSIONS AND MATERIALS

See attached drawings.

5. ACCOMMODATED CONDUCTORS (FPC/FFC)

See attached drawings.

6. PACKAGING CONDITION

See attached drawings.

7. RECOMMENDED MOUNTING PATTERN DIMENSIONS

See attached drawings.

8. RATING

8-1. Voltage: A.C.50V D.C.50V

8-2. Current: A.C.0.5A D.C.0.5A (Refer to the following note.)

8-3. Operating Temperature: -55°C ~ +105°C (Including terminal temperature rises)

NOTE

Allowable maximum current for one contact is 0.5A. Total allowable current for a whole connector is the value which is shown in the following figure.

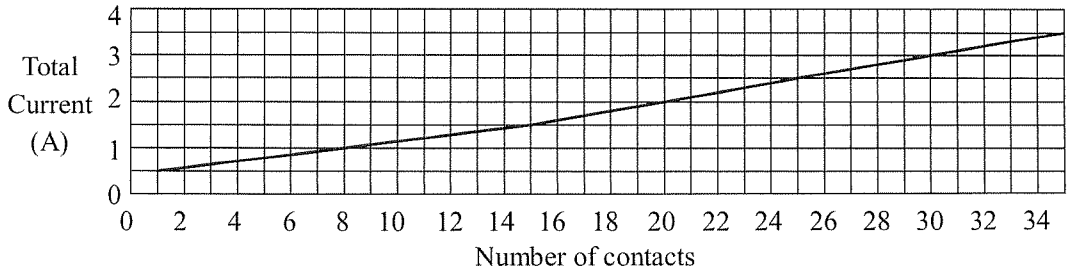

9. PERFORMANCE CHARACTERISTICS

9-1. Electrical Performance

No.	Test Item	Test Method	Requirements
9-1-1	Contact resistance	1)Measure contact resistance between V_1-V_2 by voltage drop method by the following circuit by mating accommodated conductor stipulated in clause 5 after reflow soldering the connector on the P.CB. 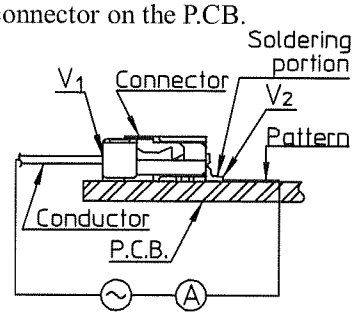 2)Open circuit voltage: Less than 20mV 3)Test current: Less than 20mA	1)Initial value : Less than 30mΩ 2)Contact resistance after the test is in accordance with the value specified in each test item.
9-1-2	Insulation resistance	1)Measure insulation resistance between adjacent contacts in a connector individual. 2)Test voltage: D.C.500V 3)Read value one minute after applying test voltage.	1)More than 100MΩ
9-1-3	Dielectric withstanding voltage	1)For one minute, apply A.C.200V between adjacent contacts in a connector individual. 2)Leakage current: 1mA	1)Free from any short circuit and insulation breakdown.

9-2. Mechanical Performance

No.	Test Item	Test Method	Requirements
9-2-1	Durability (Slider operation)	1)Measure contact resistance before and after the test by the method in clause 9-1-1 by mating the accommodated conductor specified in clause 5. 2)Number of slider open and close: 20 times (Insert and extract the conductor for each opening of the slider.)	1)Initial contact resistance : Less than 30mΩ 2)Contact resistance after the test: Less than 50mΩ 3)Free from any defect such as break etc. on the connector and conductor.
9-2-2	Vibration (Sinusoidal)	JIS C 60068-2-6 (IEC60068-2-6) 1) Frequency range : 10 ~ 500Hz 2) Amplitude: 0.75mm or Acceleration: 100m/s^2 3) Sweep rate: 1 octave/minute 4) Test time : 10 cycles	1)During the test, no circuit opening for more than 1μs. 2)Free from any defect such as break, deformation, loosing and falling off etc. on each portion of the connector.

9-3. Environmental Performance

<table>
<tr><th>No.</th><th>Test Item</th><th>Test Method</th><th>Requirements</th></tr>
<tr><td>9-3-1</td><td>Damp heat
(Steady state)</td><td>JIS C 60068-2-78 (IEC60068-2-78)
1)Measure contact resistance before and after the test by the method in clause 9-1-1 by using the accommodated conductor specified in clause 5.
2)Measure insulation resistance after the test by the method in clause 9-1-2.
3)Temperature: 40°C
4)Humidity: 90 ~ 95%(relative humidity)
5)Period of exposure: 48 hours
6)Expose conductor and connector in mated condition and leave them under normal temperature.(Without insertion and separation)</td><td>1)Initial contact resistance
: Less than 30mΩ
2)Contact resistance after the test: Less than 50mΩ
3)Insulation resistance after the test : More than 100MΩ</td></tr>
<tr><td>9-3-2</td><td>Salt spray</td><td>JIS C 60068-2-11 (IEC60068-2-11)
1)Measure contact resistance before and after the test according to the method in clause 9-1-1 by using accommodated conductor specified in clause 5.
2)Salt solution concentration: 5% by weight
3)Period of exposure: 48 hours
4)Expose conductor and connector in mated condition and leave them under normal temperature after posttreatment. (24 hours)</td><td>1)Initial contact resistance
: Less than 30mΩ
2)Contact resistance after the test: Less than 50mΩ</td></tr>
<tr><td>9-3-3</td><td>Change of temperature</td><td>JIS C 0025 (IEC60068-2-14)
1)Measure contact resistance before and after the test according to the method in clause 9-1-1 by using accommodated conductor in clause 5.
2)One cycle of temperature is as follow and test 5 cycles.
<table>
<tr><th>Step</th><th>Temp.(°C)</th><th>Time(min.)</th></tr>
<tr><td>1</td><td>-55±3</td><td>30</td></tr>
<tr><td>2</td><td>25±2</td><td>2 ~ 3</td></tr>
<tr><td>3</td><td>85±2</td><td>30</td></tr>
<tr><td>4</td><td>25±2</td><td>2 ~ 3</td></tr>
</table>
3)Expose conductor and connector in mated condition and leave them under normal temperature.</td><td>1)Initial contact resistance
: Less than 30mΩ
2)Contact resistance after the test: Less than 50mΩ
3)Free from any defect such as crack, warping and deformation etc. on each portion the connector.</td></tr>
</table>

9-4. Other performance

No.	Test Item	Test Method	Requirements
9-4-1	Soldering (Resistance to reflow soldering)	JIS C 60068-2-58 (IEC60068-2-58) 1)Solder by setting reflow bath on the following condition. 2)Preheating: 150~180°C, 120±5 s 3)Soldering : 220°C min. 60s max. 4)Peak : 245°C min. 20s max. (Peak 255°C max.) NOTE: Temperature must be measured at contact terminal portion and peak temperature on the upper surface of P.C.B must be less than 260°C. 4)Solder paste to be used is JIS Z 3282 Sn96.5Ag3.0Cu0.5	1)Contact resistance after the test : Less than 50mΩ 2)Insulation resistance after the test : More than 100MΩ 3)No short circuit and insulation breakdown for dielectric withstanding voltage test after this test. 4)Free from any damage on performance and contact performance after soldering.
		Diagram A 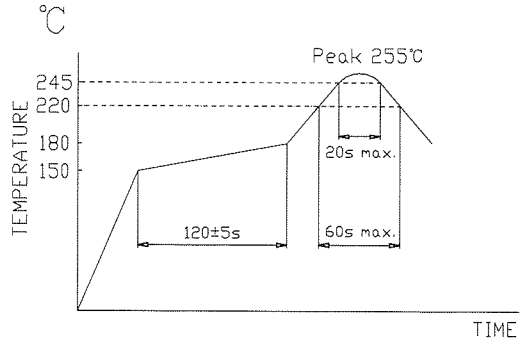 Resistance to reflow soldering profile	
9-4-2	Soldering (Solderability) (Reflow)	JIS C 60068-2-58 (IEC60068-2-58) 1)Solder by setting reflow bath on the following condition. 2)Preheating: 150~180°C, 60~120s 3)Soldering : 225°C min., 20±5s (Peak 235°C max.) NOTE: Temperature must be measured at contact terminal portion and peak temperature on the upper surface of P.C.B must be less than 260°C. 4)Solder paste to be used is JIS Z 3282 Sn96.5Ag3.0Cu0.5	1)Actual soldered area must be more than 90% of the dipped area intended to be soldered.
		Diagram B 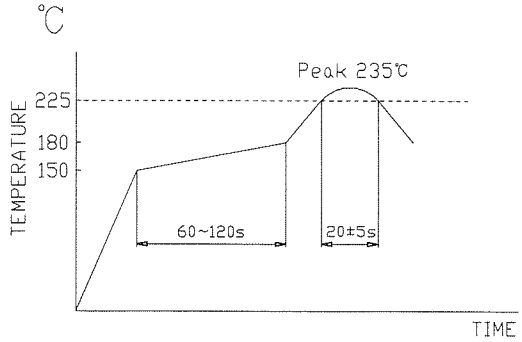 Solderability profile	
9-4-3	Conductor retention force (Reference)	1)Measure initial retention force after inserted and locked by using accommodated conductor specified in clause 5. *FCI Test FPC : t=0.33mm Gold plating	1)More than 0.25N/contact

10. INDICATION AND PACKAGING

10-1. Indication

1) Catalog number and lot number are not be indicated on the connector.
2) Catalog number and quantity shall be indicated on the surface of the package box.

10-2. Packaging

1) The connector individuals are packed by tapes with specified quantity in accordance with [JIS C 0806 "Packaging of Electronic Components on Continuous Tapes (Surface Mount components)"] and put into package box in accordance with FCI JAPAN packaging specification.

11. REMARKS

11-1. Please refer to the "Handing procedures and remarks" before use.

11-2. Retention force for accommodated conductor specified in clause 9-4-3 differs due to different thickness, structure and surface treatment of conductor. Therefore, the value of retention force specified in the clause for performance is reference value.

11-3. Since this connector can not be used for CIC (Conductor such as silver paste, carbon etc.) as accommodated conductor, please consult us separately.

12. RECOMMENDED REFLOW PROFILE

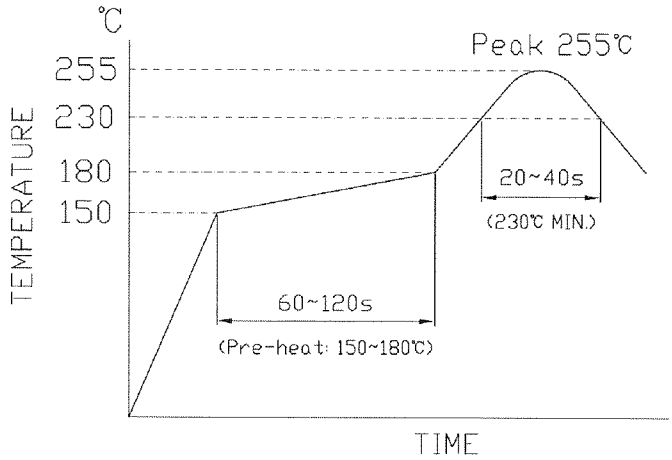

Diagram C. Recommended reflow temperature profile

Note: Please check the reflow soldering condition for your own application beforehand due to different conditions with soldering devices, P.C. Boards, etc.
No moisture treatment before reflow process.

Mouser Electronics

Authorized Distributor

Click to View Pricing, Inventory, Delivery & Lifecycle Information:

FCI / Amphenol:

SFV10R-1STE9HLF SFV21R-2STBE1HLF SFV11R-2STBE1HLF SFV30R-1STBE1HLF SFV8R-1STBE1HLF SFV31R-2STBE1HLF SFV27R-2STBE1HLF SFV7R-1STBE1HLF SFV10R-2STBE1HLF SFV13R-1STBE1HLF SFV4R-1STBE1HLF SFV29R-2STAE1HLF SFV26R-2STBE5HLF SFV32R-2STBE1HLF SFV26R-1STBE1HLF SFV9R-1STBE1HLF SFV16R-1STBE1HLF SFV17R-1STBE1HLF SFV12R-2STBE1HLF SFV19R-1STBE1HLF SFV15R-2STBE1HLF SFV25R-1STBE1HLF SFV35R-1STBE1HLF SFV7R-2STBE1HLF SFV6R-1STBE1HLF SFV27R-1STBE1HLF SFV8R-2STBE1HLF SFV30R-2STAE1HLF SFV23R-2STBE1HLF SFV30R-2STBE1HLF SFV4R-2STAE1HLF SFV28R-2STBE1HLF SFV25R-2STBE1HLF SFV23R-1STBE1HLF SFV20R-2STBE1HLF SFV29R-1STBE1HLF SFV28R-1STBE1HLF SFV34R-2STBE1HLF SFV33R-1STBE1HLF SFV35R-2STE9HLF SFV14R-1STE9HLF SFV20R-1STE9HLF SFV10R-2STE9HLF SFV32R-1STE9HLF SFV33R-2STE9HLF SFV18R-1STE9HLF SFV26R-1STAE1HLF SFV14R-2STE9HLF SFV25R-1STE9HLF SFV28R-2STE9HLF SFV22R-2STBE9HLF SFV33R-1STE9HLF SFV26R-2STBE1HLF SFV30R-2STE9HLF SFV30R-1STAE1HLF SFV35R-1STE9HLF SFV20R-2STE9HLF SFV12R-1STBE1HLF SFV16R-2STE9HLF SFV16R-1STE9HLF SFV12R-2STE9HLF SFV8R-2STE9HLF SFV28R-1STAE1HLF SFV34R-2STE9HLF SFV34R-1STE9HLF SFV8R-1STE9HLF SFV4R-1STE9HLF SFV26R-2STBE9HLF SFV12R-1STE9HLF SFV24R-1STAE1HLF SFV4R-2STE9HLF SFV14R-2STBE1HLF SFV32R-2STE9HLF SFV25R-2STE9HLF SFV28R-1STE9HLF SFV30R-1STE9HLF SFV9R-2STBE1HLF SFV4R-2STBE5HLF SFV16R-2STBE1HLF SFV8R-4STE1LF SFV7R-4STE1LF SFV17R-4STE1LF SFV25R-3STE1LF SFV9R-4STE1LF SFV32R-4STE1LF SFV35R-4STE1LF SFV16R-3STE1LF SFV18R-4STE1LF SFV23R-1STE1LF SFV25R-4STE1LF SFV9R-3STE1LF SFV27R-2STE1LF