THIS DRAWING IS UNPUBLISHED. RELEASED FOR PUBLICATION 20
© COPYRIGHT 20 BY TYCO ELECTRONICS CORPORATION. ALL RIGHTS RESERVED.

PART NUMBER	REV	FIRST USED	POWER UNIT	FEED TYPE	DESCRIPTION
1855249-1	A	122500-1	LEADMAKER	AIR FEED	CUTS CARRIER
1855249-2	A	565435-5	BENCH MODEL K	AIR FEED	CUTS CARRIER
1855249-3	A	354500-1	BENCH MODEL G	AIR FEED	CUTS CARRIER
1855249-6	A	122500-1	LEADMAKER	AIR FEED	CONTINUOUS CARRIER
7-1855249-7	A	-	-	-	SPARE PARTS

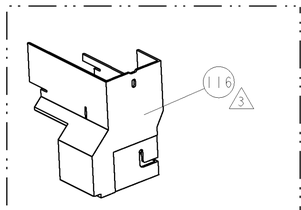

AMP-O-LECTRIC TERM GUARD

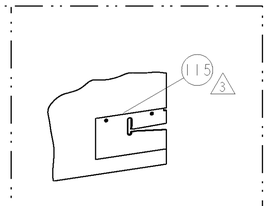

G TERMINATOR GUARD

TERMINAL NAME: T-20 GROUND TERMINAL, DOUBLE CRIMP

TYCO PN	MANUF PN	CHRISTIANA IND TERMINAL - AMP CRIMP SPECS			
1949334-1	1302316 △4				
1949334-2	1302314 △4	CRIMP HEIGHT		WIRE SIZE	REF SETTING
-	-	.075±.002 [1.90±0.05mm]		(2) 18AWG	D-2
-	-	.070±.002 [1.78±0.05mm]		(2) 20AWG	E-0
-	-	-		-	-
-	-	-		-	-
-	-	CRIMP	SIZE	TYPE	RANGE
-	-	WIRE	.090 [2.29mm]	F	(2) 20-18 AWG
-	-	INSUL	.140 [3.56mm]	OV	Ø.100 MAX
WIRE STRIP LENGTH .116 -.131	TERM APPL SPEC NONE	FEED △6	APPLICATOR INSTRUCTIONS 408-8040		SET UP GAGE 458637-1

LOC	DIST
A	66

REVISIONS

P	LTR	DESCRIPTION	DATE	DWN	APVD
	A	RELEASED	24APR2007	MEH	TE

△1 RECOMMENDED SPARE PARTS

△2 GREASE LIGHTLY

△3 GUARD MUST BE IN PLACE WHEN OPERATING APPLICATOR IN A BENCH MACHINE

△4 FEED ADJUSTMENT AND STRIP GUIDE ADJUSTMENT REQUIRED WHEN CHANGING TERMINALS

△5 CUT TO LENGTH AT ASSY

△6 TERMINAL PN 1949334-1; FEED = 1.634"
TERMINAL PN 1949334-2; FEED = 1.275"

*** WARNING**
ON INSTALLATION, SET WIRE DISC TO LARGEST WIRE SIZE SETTING. USE OF SETTINGS BELOW MIN. REQUIRED CRIMP HEIGHT SETTING WILL CAUSE DAMAGE TO CRIMP TOOLING.

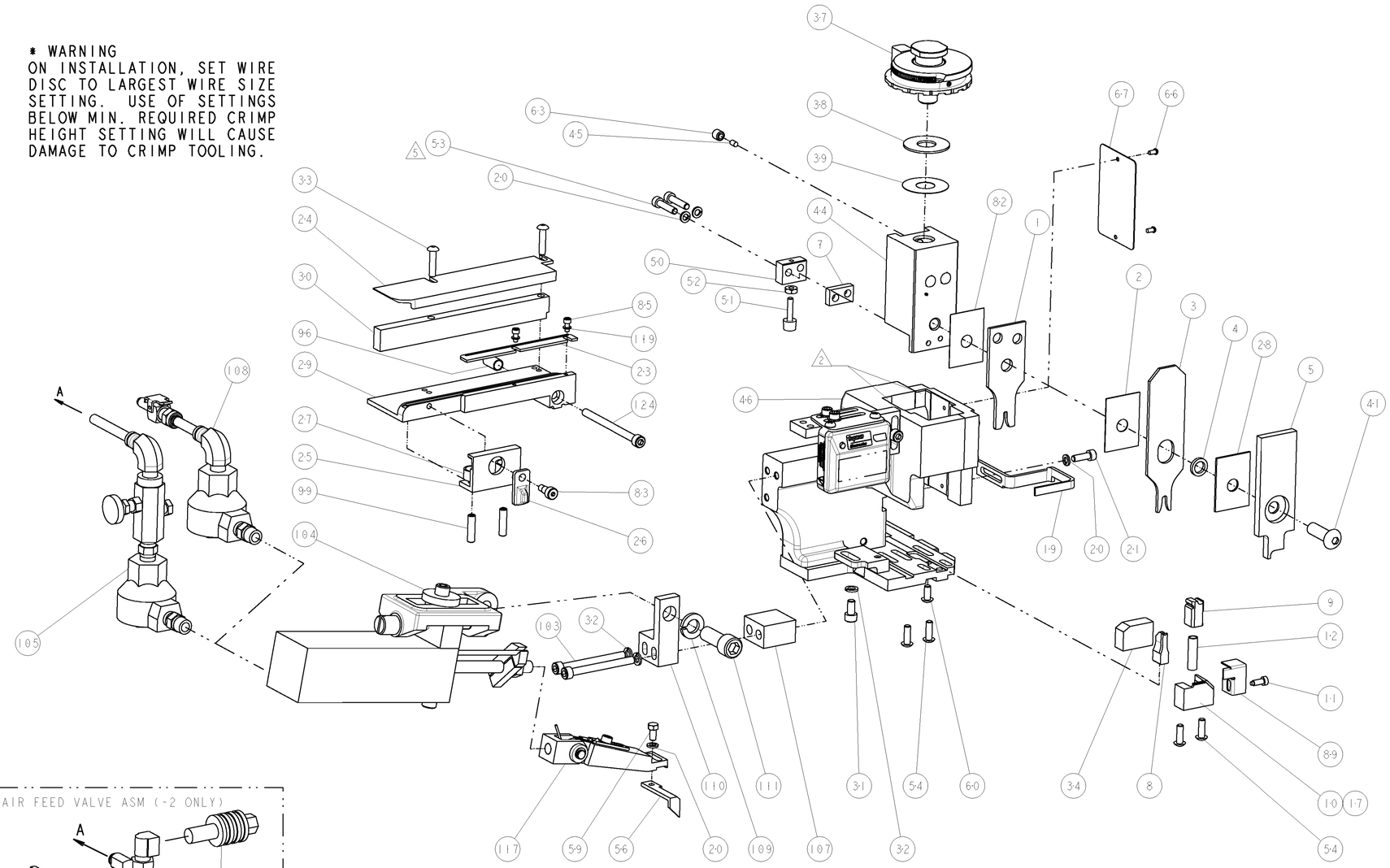

-	1	1	1	1	-	8-21000-7	SCR, SKT HD CAP 10-32 X 2.500	124
-	2	2	2	2	-	21024-2	WASHER, SPRG LOCK, REG NO 4	119
-	-	-	REF	-	-	692655-6	AIR FEED VALVE ASSEMBLY	118
-	1	1	1	1	-	461062-1	FEED FINGER ASSEMBLY	117
△3 -	-	-	REF	-	..	455749-1	GUARD WINDOW	116
△3 -	-	REF	-	-	..	679532-1	INSERT, GUARD	115
-	1	1	1	1	-	3-21001-5	SCR, SKT HD CAP 3/8-16 X 1.000	111
-	1	1	1	1	-	459610-9	MOUNT, FEED BRACKET	110
-	1	1	1	1	-	21024-8	WASHER, SPRG LOCK, REG 3/8	109
-	1	1	-	1	-	692655-7	AIR FEED VALVE ASSEMBLY	108
-	1	1	1	1	-	461690-1	SPACER, AIR FEED	107
-	-	-	REF	-	-	24024-2	VALVE, SHUT OFF	106
-	-	-	1	-	-	692655-5	AIR FEED VALVE ASSEMBLY	105
-	1	1	1	1	-	461065-2	ASSEMBLY, AIR FEED	104
-	2	2	2	2	-	4-21000-3	SCR, SKT HD CAP 10-32 X 2.000	103
-	2	2	2	2	-	5-21006-6	SCR, SET, CUP POINT 10-32 X .750	99
-	1	1	1	1	-	1-22281-8	SPRING, COMPRESSION	96
-	1	1	1	1	-	318563-1	GUARD, FRONT CHIP	89
-	2	2	2	2	-	1-21000-3	SCR, SKT HD CAP 4-40 X .250	85
-	1	1	1	1	-	21989-8	SCR, SKT HD SHLDR 3/16 DIA X .250	83
-	1	1	1	1	-	455888-1	SPACER, CRIMPER	82
-	1	1	1	1	-	4088040	SF APPL INST 408-8040	72
-	1	1	1	1	-	217238-1	GENERAL INSTRUCTION PKG	71
-	1	1	1	1	-	461264-5	PLATE, IDENTIFICATION	67
-	2	2	2	2	-	21017-2	SCREW, DRIVE	66
-	1	1	1	1	-	21009-2	SCR, SET, SELF LOCKING 1/4-20 X .250	63
-	1	1	1	1	-	22733-8	SCR, BHSC, SELF-LOCKING, 8-32 X .375	60
-	1	1	1	1	-	2-22603-0	SCR, HEX HD CAP 8-32 X .312	59
-	1	1	1	1	-	4-694433-7	FEED PAWL	56
-	4	4	4	4	-	2-21002-2	SCR, BTN SKT HD CAP 8-32 X .500	54
△5 -	2	2	2	2	-	2-21000-9	SCR, SKT HD CAP 8-32 X .750	53
-	1	1	1	1	-	21018-5	NUT, HEX, REG 6-32	52
-	1	1	1	1	-	811242-2	BUMPER, HOLD DOWN	51
-	1	1	1	1	-	690753-1	SPACER, TONKER	50
-	1	1	1	1	-	1633399-1	APPL., BASIC AIR FEED SUB ASSY	46
-	1	1	1	1	-	690191-1	PLUG,NYLON	45
-	1	1	1	1	-	1-455673-4	RAM, SIDE FEED	44
-	1	1	1	1	-	7-21002-9	SCR, BTN SKT HD CAP 5/16-24 X 1.00	41
-	1	1	1	1	-	690125-1	SHIM SUB-ASSY	39
-	1	1	1	1	-	1-469367-1	SHIM	38
-	1	1	1	1	-	879103-2	FINE ADJUST HEAD ASSEMBLY	37
-	1	1	1	1	-	4-690786-8	TERMINAL SUPPORT	34
-	2	2	2	2	-	2-21002-4	SCR, BTN SKT HD CAP 8-32 X .750	33
-	3	3	3	3	-	21024-5	WASHER, SPRG LOCK, REG NO 10	32
-	1	1	1	1	-	3-21000-4	SCR, SKT HD CAP 10-32 X .375	31
-	1	1	1	1	-	1-1320908-9	SPACER, STRIP GUIDE	30
-	1	1	1	1	-	1-1633087-3	PLATE, STRIP GUIDE	29
-	1	1	1	1	-	1-455888-0	SPACER, CRIMPER	28
-	2	2	2	2	-	1-22284-0	SPRING, COMPRESSION	27
-	1	1	1	1	-	356835-1	LEVER, DRAG RELEASE	26
-	1	1	1	1	-	240792-1	DRAG, TERMINAL	25
-	1	1	1	1	-	1-1320928-4	PLATE, STRIP GUIDE	24
-	1	1	1	1	-	2-690438-0	FRONT STRIP GUIDE	23
-	1	1	1	1	-	2-21000-7	SCR, SKT HD CAP 8-32 X .500	21
-	4	4	4	4	-	21024-4	WASHER, SPRG LOCK, REG NO 8	20
-	1	1	1	1	-	456468-5	STRIPPER, SPECIAL	19
△1 -	1	-	-	-	-	679625-1	SHEAR HOLDER, FRONT (NO CUT)	17
-	1	1	1	1	-	3-22280-3	SPRING, COMPRESSION	12
-	1	1	1	1	-	690461-1	STOP, SHEAR	11
△1 -	-	1	1	1	-	690459-1	SHEAR HOLDER, FRONT	10
△1 -	1	1	1	1	-	462006-1	FLOATING SHEAR, FRONT	9
△1 1	1	1	1	1	-	1-1633110-9	ANVIL, COMBINATION .090	8
-	1	1	1	1	-	240641-3	SPACER	7
-	1	1	1	1	-	2-455889-0	DEPRESSOR, SHEAR	5
-	1	1	1	1	-	2-238011-2	BLOCK, CRIMPER SPACER	4
△1 1	1	1	1	1	-	1-854830-0	CRIMPER, INSULATION SPECIAL	3
-	1	1	1	1	-	455888-4	SPACER, CRIMPER	2
△1 1	1	1	1	1	-	1-456406-8	CRIMPER, WIRE PREMIUM	1
-77	-6	-3	-2	-1	U/M	PART NO	DESCRIPTION	ITEM NO

AIR FEED VALVE ASM (-2 ONLY)

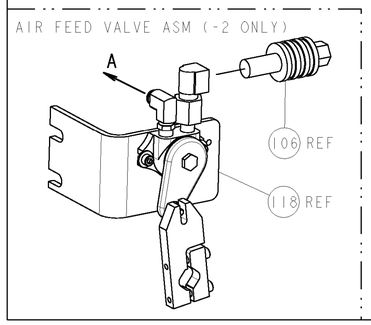

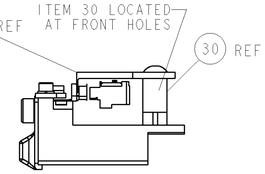

FEED TRACK POSITION

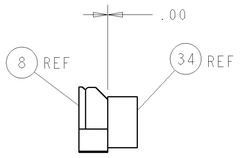

TERMINAL SUPPORT LOCATION

THIS DRAWING IS A CONFIDENTIAL DOCUMENT OF TYCO ELECTRONICS CORPORATION. IT IS SUBMITTED TO CUSTOMER WITH THE UNDERSTANDING THAT THE INFORMATION SHOULD BE CONTACTED FOR THE LATEST REVISION.

DWN	M HERR	30MAR2006
CHK	G. BAILEY	30MAR2007
APVD	T. BENCHOFF	30MAR2007

DIMENSIONS: INCHES

TOLERANCES UNLESS OTHERWISE SPECIFIED:
0 PLC ±-
1 PLC ±0.1
2 PLC ±0.01
3 PLC ±0.001
4 PLC ±0.0001
ANGLES ±-

MATERIAL -
FINISH -

PRODUCT SPEC -
APPLICATION SPEC -
WEIGHT -

tyco Electronics — Tyco Electronics, Harrisburg, PA 17105-3608

NAME: FINE ADJUST SIDE FEED HDM APPLICATOR

SIZE	CAGE CODE	DRAWING NO	RESTRICTED TO
A1	00779	C-1855249	-

CUSTOMER DRAWING — SCALE 3:5 — SHEET 1 OF 1 — REV A

CUSTOMER VIEWABLE ASSEMBLY

AMP 4805 REV 31MAR2000

Pro/ENGINEER DRAWING

Mouser Electronics

Authorized Distributor

Click to View Pricing, Inventory, Delivery & Lifecycle Information:

TE Connectivity:

1855249-6