THIS DRAWING IS UNPUBLISHED. RELEASED FOR PUBLICATION 20
© COPYRIGHT 20 BY TYCO ELECTRONICS CORPORATION. ALL RIGHTS RESERVED.

PART NUMBER	REV	TERMINATOR	FEED TYPE	DESCRIPTION
1529242-1	D	BENCH & LEADMAKER	MECH POST FEED	HDI APPLICATOR
7-1529242-1	D	BENCH & LEADMAKER	MECH POST FEED	-1 AND SPARE PARTS
7-1529242-7	A	-	-	SPARE PARTS KIT

SET UP GAGE 458638-3

LOC	DIST
A	66

REVISIONS

P	LTR	DESCRIPTION	DATE	DWN	APVD
	A	SEE ECO-07-015743	04JUL2007	DP	MC
	B	SEE ECR-07-023818	08OCT2007	LJL	MC
	C	ECR-08-010331	23APR2008	MY	GB
	D	ECR-08-018098	18JUL2008	MY	TE

CRIMP DATA — TE TERMINAL — TE CRIMP SPECS

TERMINAL NAME: FASTIN-FASTON 2.8MM RECEPTACLE

CRIMP	SIZE	TYPE	RANGE
WIRE	1.57 [.062 IN]	F	0.50mm²
INSUL	2.03 [.080 IN]	O	1.40-1.60 [.055-.063 IN]

WIRE STRIP LENGTH 3.40-4.20 [.134-.165 IN]

APPL INSTRUCTIONS 408-8323 & 408-8490

TERMINAL 114-18022 -
APPL SPEC - -

FEED 16.80 [.661 IN]

TERMINALS APPLIED

1703450	-	-	-
-	-	-	-
-	-	-	-
-	-	-	-
-	-	-	-

WIRE SIZE	CRIMP HEIGHT *	REF SETTING *
0.50mm²	0.99 ±0.03 [.039 ±.001 IN]	C2
-	-	-
-	-	-
-	-	-
-	-	-
-	-	-
-	-	-
-	-	-
-	-	-
-	-	-
-	-	-

1. RECOMMENDED SPARE PARTS
2. GREASE RAM, CAM, CAM FOLLOWER AND FEED ROD LIGHTLY.
3. CERTAIN TERMINALS REQUIRE LUBRICATION. REFER TO THE APPLICATOR INSTRUCTION SHEET FOR MORE INFORMATION.
4. LUBRICATE DAILY PER THE APPLICATOR INSTRUCTION SHEET SUPPLIED WITH THE APPLICATOR.

* WARNING

ON INSTALLATION, SET WIRE DISC TO LARGEST WIRE SIZE SETTING. USE OF SETTINGS BELOW MIN. REQUIRED CRIMP HEIGHT SETTING WILL CAUSE DAMAGE TO CRIMP TOOLING.

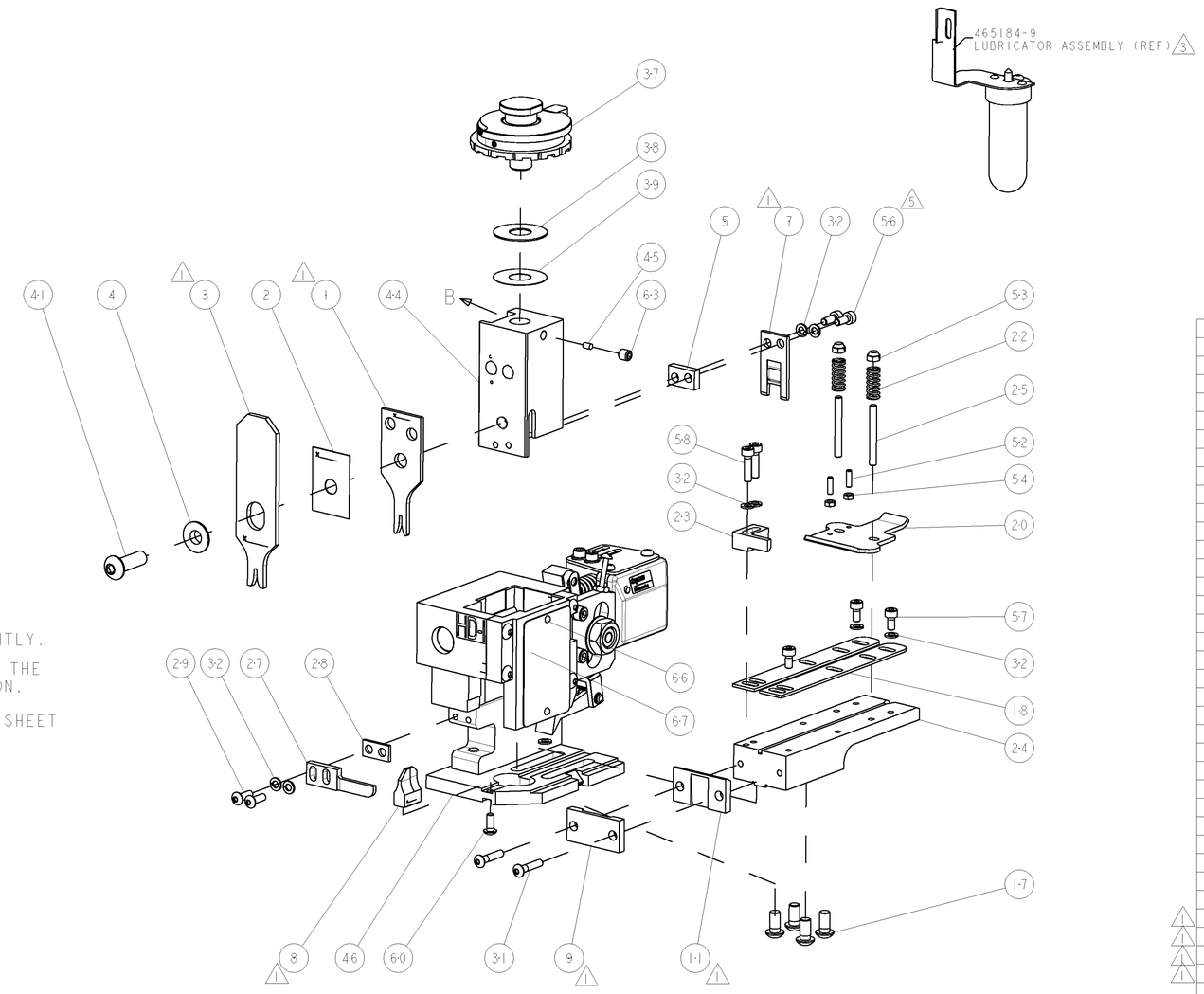

-	1	1	1338705-4	DOCUMENTATION PACKAGE	71
-	1	1	461264-5	PLATE, IDENTIFICATION	67
-	2	2	21017-2	SCREW, DRIVE	66
-	1	1	3-18031-0	SCR, SET, CUP POINT M6 X 6.0	63
-	1	1	18024-7	SCR, BTN SKT HD CAP (M4 X 10.0)	60
-	2	2	1-18023-3	SCR, SKT HD CAP M4 X 16.0	58
-	3	3	1-18023-0	SCR, SKT HD CAP M4 X 8.0	57
-	2	2	1-18023-1	SCR, SKT HD CAP M4 X 10.0	56
-	2	2	18029-1	NUT, HEX, REG M3	54
-	2	2	986965-1	NUT, LOCK, HEX, TORQUE (M4)	53
-	2	2	2-18032-2	SCR, SET, FLT POINT M3 X 10.0	52
-	1	1	18024-3	SCR, BTN SKT HD CAP (M3 X 10.0)	49
-	1	1	1338676-1	CAM, UNIVERSAL POST-FEED	47
-	1	1	1338662-1	SUB ASSY, APPLICATOR FRAME	46
-	1	1	690191-1	PLUG,NYLON	45
-	1	1	1320998-1	RAM	44
-	1	1	2-18024-6	SCR, BTN SKT HD CAP (M8 X 25.0)	41
-	1	1	690125-1	SHIM SUB-ASSY	39
-	1	1	469367-8	SHIM	38
-	1	1	879103-3	FINE ADJUST HEAD ASSEMBLY	37
-	9	9	18025-2	WASHER, SPRG LOCK, REG M4	32
-	2	2	1-18024-0	SCR, BTN SKT HD CAP (M4 X 20.0)	31
-	2	2	18024-8	SCR, BTN SKT HD CAP (M4 X 12.0)	29
-	1	1	3-690451-2	SPACER, STRIPPER	28
-	1	1	240639-1	STRIPPER (MACHINING)	27
-	2	2	1320906-1	STUD, THREADED	25
-	1	1	1-1320995-0	PLATE, STRIP GUIDE	24
-	1	1	240825-6	PLATE, STRIP HOLD DOWN	23
-	2	2	4-22281-1	SPRING, DRAG	22
-	1	1	1338665-1	DRAG	20
-	2	2	1338663-3	GUIDE, LOWER STRIP	18
-	4	4	1-18024-8	SCR, BTN SKT HD CAP (M6 X 12.0)	17
1 -	1	1	240833-4	PLATE, REAR SHEAR	11
1 -	1	1	690482-7	PLATE, FRONT SHEAR	9
1 1	2	1	1-1633383-8	ANVIL, COMBINATION	8
1 -	1	1	690474-7	BLADE, SLUG	7
-	1	1	5-240641-0	SPACER	5
-	1	1	238009-1	BLOCK, FL CRIMPER SPACER	4
1 1	2	1	1-904741-5	CRIMPER, INSUL O PREMIUM	3
-	1	1	455888-4	SPACER, CRIMPER	2
1 1	2	1	2-456403-6	CRIMPER, WIRE PREMIUM	1
-77	-71	-1	PART NO	DESCRIPTION	ITEM NO

VIEW B ROTATED 180°

POST-FEED 40mm STROKE

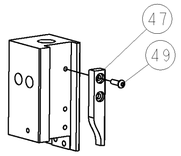

POST-FEED 30mm STROKE

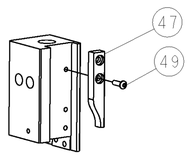

AMP 4805 REV 31MAR2000

Pro/ENGINEER DRAWING

THIS DRAWING IS A CONTROLLED DOCUMENT FOR TYCO ELECTRONICS CORPORATION. IT IS SUBJECT TO CHANGE WITHOUT NOTICE. ANY QUESTIONS REGARDING THIS DRAWING SHOULD BE CONTACTED FOR THE LATEST REVISION.

DIMENSIONS: INCHES

TOLERANCES UNLESS OTHERWISE SPECIFIED:
0 PLC ±-
1 PLC ±0.1
2 PLC ±0.01
3 PLC ±0.001
4 PLC ±0.0001
ANGLES ±-

MATERIAL - -
FINISH - -

DWN D PROUSE 02APR2007
CHK -
APVD M CLIFFORD 02APR2007
PRODUCT SPEC -
APPLICATION SPEC -
WEIGHT -

Tyco Electronics
Tyco Electronics
Harrisburg, PA 17105-3608

NAME FINE ADJUST END FEED HDI APPLICATOR -

SIZE	CAGE CODE	DRAWING NO	RESTRICTED TO
A1	00779	C-1529242	-

CUSTOMER DRAWING | SCALE 3:5 | SHEET 1 OF 1 | REV D

CUSTOMER VIEWABLE ASSEMBLY

Mouser Electronics

Authorized Distributor

Click to View Pricing, Inventory, Delivery & Lifecycle Information:

TE Connectivity:

1529242-1