THIS DRAWING IS UNPUBLISHED. RELEASED FOR PUBLICATION -,- .
© COPYRIGHT - By - ALL RIGHTS RESERVED.

LOC	DIST
—	—

REVISIONS

P	LTR	DESCRIPTION	DATE	DWN	APVD
	E	END STAND OFF WIDTH INCREASED	06JAN2016	KJK	PS

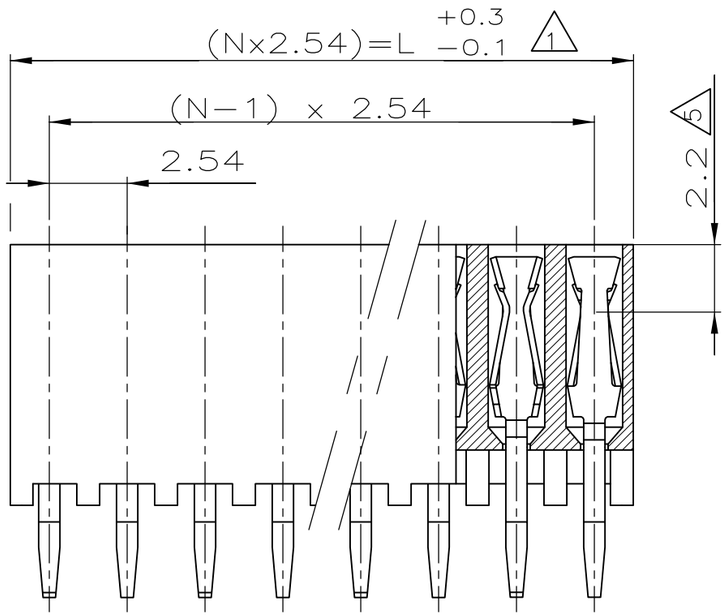

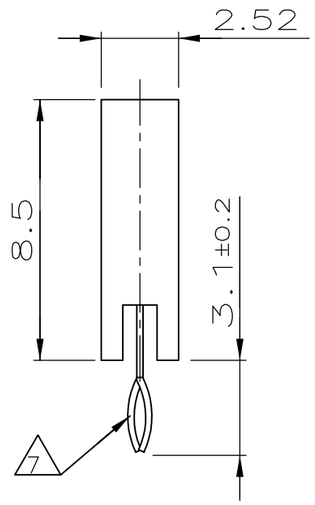

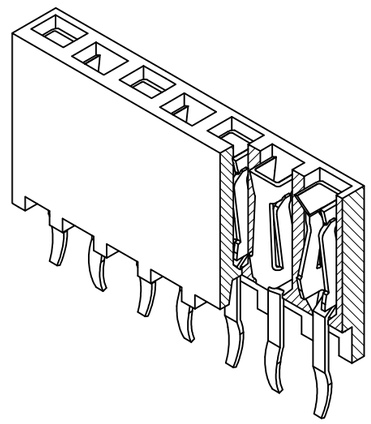

POS.	L	PART NUMBER	
–	–	–	
2	5.08	215 299–2	
3	7.62	–3	
4	10.16	–4	
5	12.70	–5	
6	15.24	–6	
7	17.78	–7	OBSOLETE
8	20.32	–8	
9	22.86	–9	OBSOLETE
10	25.40	1– –0	
11	27.94	1– –1	OBSOLETE
12	30.48	1– –2	
13	33.02	1– –3	OBSOLETE
14	35.56	1– –4	
15	38.10	1– –5	OBSOLETE
16	40.64	1– –6	
17	43.18	1– –7	OBSOLETE
18	45.72	1– –8	
19	48.26	1– –9	OBSOLETE
20	50.80	2– –0	
21	53.34	2– –1	
22	55.88	2– –2	
23	58.42	2– –3	
24	60.96	2– –4	OBSOLETE
25	63.50	2– –5	OBSOLETE
26	66.04	2– –6	OBSOLETE
27	68.58	2– –7	
28	71.12	2– –8	
29	73.66	2– –9	
30	76.20	3– –0	OBSOLETE
31	78.74	3– –1	OBSOLETE
32	81.28	3– –2	
33	83.82	3– –3	
34	86.36	3– –4	
35	88.90	3– –5	
36	91.44	3– 215 299–6	OBSOLETE

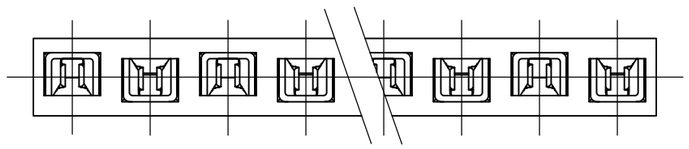

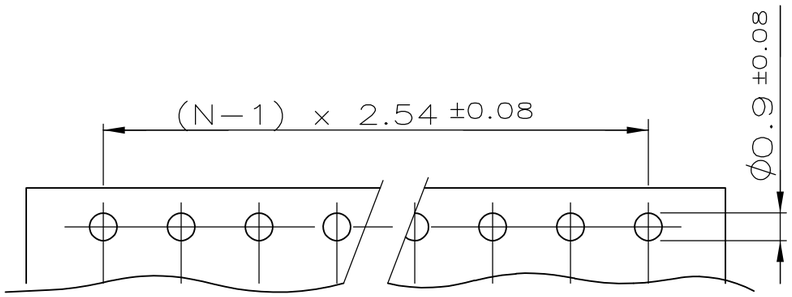

P.C.–BOARD HOLE–PATTERN

NOTES:

1. TO DETERMINE DIMENSIONS TAKE N = NO. OF POS.
FOR EXAMPLE: 10 POS.: N x 2,54 = 25,4 mm.
FOR ORDER NO. USE BASIC NO. + NO. OF POS.
FOR EXAMPLE: 2 POS.= 215 299–2 (SHORTEST VERSION)
36 POS.= 3–215 299–6 (LONGEST VERSION)

2. HOUSING MATERIAL: GREEN GLASSFILLED POLYESTER, UL 94V–0
CONTACT MATERIAL: PHOSPHOR BRONZE.

3. PLATING: UNDERCOATING: 1,3µm Ni.
AT CONT.PLACE: 0,8µm Au.
AT SOLDER–TYNES: 3.0µm–5.0µm Sn

4. MATES WITH 0,63 SQUARE/ROUND MODU POSTS.

5. CONTACT–POINT.

6. RECOMMENDED P.C.BOARD–THICKNESS: 1,6.

7. RETENTION FEATURE.

8. HV100 CONNECTOR PACKED IN ANTISTATIC BLISTER TRAY

VERWENDET FüR
E 92–9803

THIS DRAWING IS A CONTROLLED DOCUMENT.

DIMENSIONS: mm

TOLERANCES UNLESS OTHERWISE SPECIFIED: ±0.1mm
0 PLC ± –
1 PLC ± –
2 PLC ± –
3 PLC ± –
4 PLC ± –
ANGLES ± –

MATERIAL: SEE NOTES
FINISH: SEE NOTES

DWN L.V.D.HEYDEN 09.07.86
CHK W.SIMONS –
APVD L.v.SOEST
PRODUCT SPEC 108–19056
APPLICATION SPEC —
WEIGHT —

TE Connectivity

NAME: HV 100 VERTICAL CONNECTOR
SINGLE ROW, 8,5mm HEIGHT,
TOP ENTRY, GOLD, MAX 36 POS.

SIZE	CAGE CODE	DRAWING NO	RESTRICTED TO
A3	00779	C–215299	—

CUSTOMER DRAWING | SCALE 5:1 | SHEET 1 OF 1 | REV E

Mouser Electronics

Authorized Distributor

Click to View Pricing, Inventory, Delivery & Lifecycle Information:

TE Connectivity:

215299-3