ERbic Profibus, horizontal

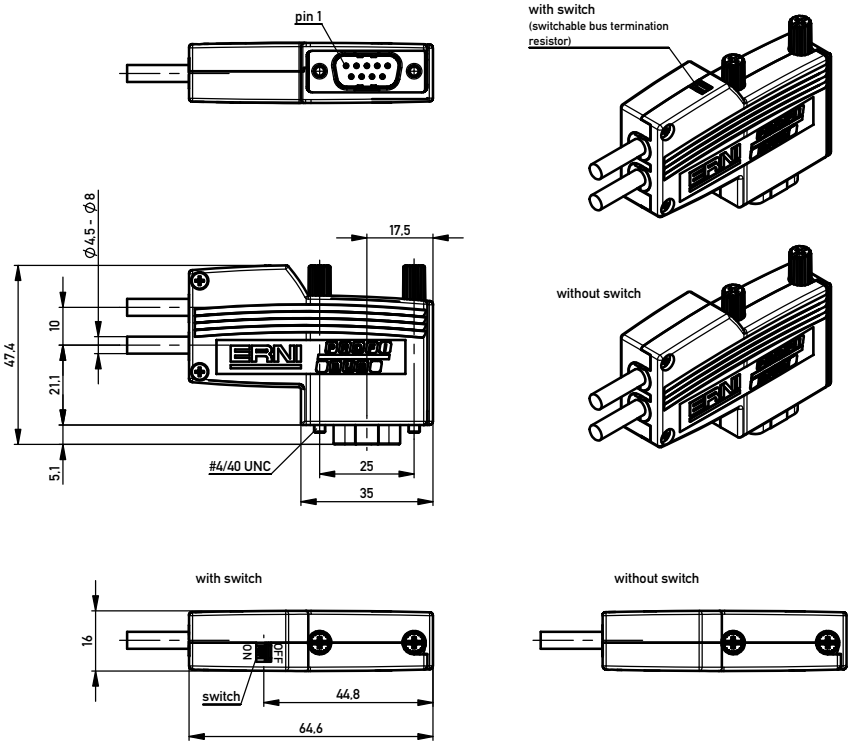

Part number	Type	Programming interface (PU)	Cable termination	Colour	Signals / Power supply	Fastening screw thread
104050	Switch	without	Screw clamp 4 pin	pebble grey	A- and B Line	#4-40 UNC
174048			Spring clamp 4 pin			
144037			IDC terminal 2x2 pin			
134728			Screw clamp 4 pin			
103648	Node		Screw clamp 4 pin			
103649	Termination		Screw clamp 2 pin	yellow		

ERbic Profibus with PU interface, horizontal

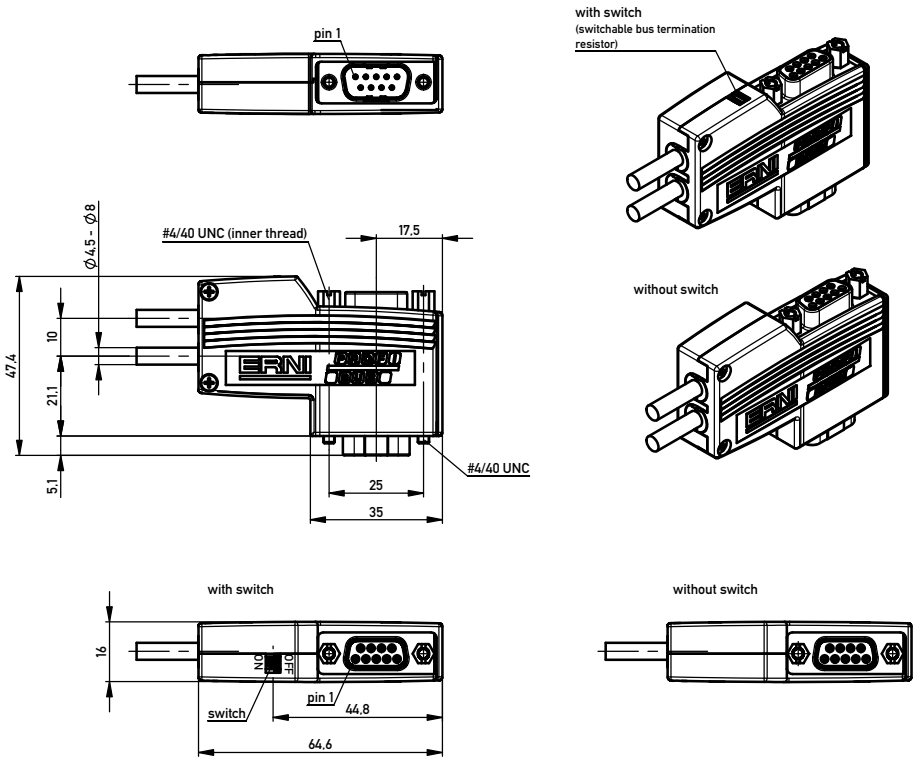

Part number	Type	Programming interface (PU)	Cable termination	Colour	Signals / Power supply	Fastening screw thread
366326	Switch	with	Screw clamp 4 pin	light grey	A- and B Line	#4-40 UNC
174049			Spring clamp 4 pin	pebble grey		
144536			IDC terminal 2x2 pin			
144475			Screw clamp 4 pin			
103663	Node		Screw clamp 4 pin			
104329	Termination		Screw clamp 2 pin	yellow		

Notes:

1. Operating temperature: -20°C / +70°C
2. Protection class: IP40
3. Sealing plate: Drawing number 103356.

Information:

Tolerances

All Dimensions in mm

Scale 1:1

Angaben zu entsprechender Ident-Nr. siehe Fertigungsunterlagen.
For further information about I.D. number see manufacturing document.

All rights reserved.
Only for Information.
To ensure that this is the latest version of this drawing, please contact one of the ERNI companies before using.

Subject to modification without prior notice.
Drawing will not be updated.

Designation

ERbic horizontal Profibus

General plan

ERNI www.ERNI.com

324261

I

A2

Class ERBIC

Index Date

Copyright by ERNI GmbH
Proprietary notice pursuant to ISO 16016 to be observed

Mouser Electronics

Authorized Distributor

Click to View Pricing, Inventory, Delivery & Lifecycle Information:

ERNI Electronics:

103648