Chip Ferrite Bead BLM18□□□□□□N1□ Reference Specification

1.Scope

This reference specification applies to Chip Ferrite Bead BLM18_□N Series.

2.Part Numbering

(ex.) BL M 18 AG 121 S N 1 D
(1) (2) (3) (4) (5) (6) (7) (8) (9)
(1)Product ID (2)Type (3)Dimension(L×W) (4)Characteristics (5)Typical Impedance at 100MHz
(6)Performance (7)Category (8)Numbers of Circuit (9)Packaging(D:Taping / B:Bulk)

3.Rating

Customer Part Number	MURATA Part Number	Impedance (Ω) (at 100MHz, Under Standard Testing Condition)		Rated Current (mA)		DC Resistance (Ω max.)		Remark
			Typical	at 85℃	at 125℃	Initial Values	Values After Testing	
	BLM18RK121SN1D	120±25%	120	200		0.25	0.35	For Digital Interface
	BLM18RK121SN1B							
	BLM18RK221SN1D	220±25%	220	200		0.30	0.40	
	BLM18RK221SN1B							
	BLM18RK471SN1D	470±25%	470	200		0.50	0.60	
	BLM18RK471SN1B							
	BLM18RK601SN1D	600±25%	600	200		0.60	0.70	
	BLM18RK601SN1B							
	BLM18RK102SN1D	1000±25%	1000	200		0.80	0.90	
	BLM18RK102SN1B							
	BLM18PG300SN1D	20 min.	30	1000		0.05	0.10	For DC power line
	BLM18PG300SN1B							
	BLM18PG330SN1D	33±25%	33	3000*1	1000*1	0.025	0.050	
	BLM18PG330SN1B							
	BLM18PG600SN1D	40 min.	60	1000		0.1	0.2	
	BLM18PG600SN1B							
	BLM18PG121SN1D	120±25%	120	2000*1	1000*1	0.05	0.10	
	BLM18PG121SN1B							
	BLM18PG181SN1D	180±25%	180	1500*1	1000*1	0.09	0.18	
	BLM18PG181SN1B							
	BLM18PG221SN1D	220±25%	220	1400*1	1000*1	0.10	0.14	
	BLM18PG221SN1B							
	BLM18PG331SN1D	330±25%	330	1200*1	1000*1	0.15	0.20	
	BLM18PG331SN1B							
	BLM18PG471SN1D	470±25%	470	1000		0.20	0.26	
	BLM18PG471SN1B							
	BLM18KG221SN1D	220±25%	220	2200*1	1500*1	0.050	0.060	
	BLM18KG221SN1B							
	BLM18KG331SN1D	330±25%	330	1700*1	1200*1	0.080	0.095	
	BLM18KG331SN1B							
	BLM18KG471SN1D	470±25%	470	1500*1	1000*1	0.130	0.145	
	BLM18KG471SN1B							
	BLM18KG601SN1D	600±25%	600	1300*1	1000*1	0.150	0.165	
	BLM18KG601SN1B							
	BLM18KG102SN1D	1000±25%	1000	1000*1	800*1	0.200	0.230	
	BLM18KG102SN1B							
	BLM18SD220SN1D	22±25%	22	6000*1	3500*1	0.008	0.013	
	BLM18SD220SN1B							
	BLM18SG330SN1D	33±25%	33	6000*1	3500*1	0.008	0.013	
	BLM18SG330SN1B							

Customer Part Number	MURATA Part Number	Impedance (Ω) (at 100MHz, Under Standard Testing Condition)		Rated Current (mA)		DC Resistance (Ω max.)		Remark
			Typical	at 85℃	at 125℃	Initial Values	Values After Testing	
	BLM18AG121SN1D BLM18AG121SN1B	120±25%	120	800		0.18	0.28	For general use
	BLM18AG151SN1D BLM18AG151SN1B	150±25%	150	700		0.25	0.35	
	BLM18AG221SN1D BLM18AG221SN1B	220±25%	220	700		0.25	0.35	
	BLM18AG331SN1D BLM18AG331SN1B	330±25%	330	600		0.30	0.40	
	BLM18AG471SN1D BLM18AG471SN1B	470±25%	470	550		0.35	0.45	
	BLM18AG601SN1D BLM18AG601SN1B	600±25%	600	500		0.38	0.48	
	BLM18AG102SN1D BLM18AG102SN1B	1000±25%	1000	450		0.50	0.60	
	BLM18BB050SN1D BLM18BB050SN1B	5±25%	5	800		0.05	0.10	For high speed signal line
	BLM18BA050SN1D BLM18BA050SN1B	5±25%	5	500		0.2	0.3	
	BLM18BB100SN1D BLM18BB100SN1B	10±25%	10	700		0.10	0.20	
	BLM18BA100SN1D BLM18BA100SN1B	10±25%	10	500		0.25	0.35	
	BLM18BB220SN1D BLM18BB220SN1B	22±25%	22	700		0.20	0.30	
	BLM18BA220SN1D BLM18BA220SN1B	22±25%	22	500		0.35	0.45	
	BLM18BB470SN1D BLM18BB470SN1B	47±25%	47	600		0.25	0.35	
	BLM18BD470SN1D BLM18BD470SN1B	47±25%	47	500		0.3	0.4	
	BLM18BA470SN1D BLM18BA470SN1B	47±25%	47	300		0.55	0.65	
	BLM18BB600SN1D BLM18BB600SN1B	60±25%	60	600		0.25	0.35	
	BLM18BA750SN1D BLM18BA750SN1B	75±25%	75	300		0.70	0.80	
	BLM18BB750SN1D BLM18BB750SN1B	75±25%	75	600		0.30	0.40	
	BLM18BB121SN1D BLM18BB121SN1B	120±25%	120	550		0.30	0.40	
	BLM18BD121SN1D BLM18BD121SN1B	120±25%	120	300		0.4	0.5	
	BLM18BA121SN1D BLM18BA121SN1B	120±25%	120	200		0.9	1.0	
	BLM18BB141SN1D BLM18BB141SN1B	140±25%	140	500		0.35	0.45	
	BLM18BB151SN1D BLM18BB151SN1B	150±25%	150	450		0.37	0.47	
	BLM18BD151SN1D BLM18BD151SN1B	150±25%	150	300		0.4	0.5	
	BLM18BB221SN1D BLM18BB221SN1B	220±25%	220	450		0.45	0.55	
	BLM18BD221SN1D BLM18BD221SN1B	220±25%	220	250		0.45	0.55	

Customer Part Number	MURATA Part Number	Impedance (Ω) (at 100MHz, Under Standard Testing Condition)		Rated Current (mA)		DC Resistance (Ω max.)		Remark
			Typical	at 85℃	at 125℃	Initial Values	Values After Testing	
	BLM18BB331SN1D BLM18BB331SN1B	330±25%	330	400		0.58	0.68	For high speed signal line
	BLM18BD331SN1D BLM18BD331SN1B	330±25%	330	250		0.5	0.6	
	BLM18BD421SN1D BLM18BD421SN1B	420±25%	420	250		0.55	0.65	
	BLM18BB471SN1D BLM18BB471SN1B	470±25%	470	300		0.85	0.95	
	BLM18BD471SN1D BLM18BD471SN1B	470±25%	470	250		0.55	0.65	
	BLM18BD601SN1D BLM18BD601SN1B	600±25%	600	200		0.65	0.75	
	BLM18BD102SN1D BLM18BD102SN1B	1000±25%	1000	200		0.85	0.95	
	BLM18BD152SN1D BLM18BD152SN1B	1500±25%	1500	150		1.2	1.3	
	BLM18BD182SN1D BLM18BD182SN1B	1800±25%	1800	150		1.5	1.6	
	BLM18BD222SN1D BLM18BD222SN1B	2200±25%	2200	150		1.5	1.6	
	BLM18BD252SN1D BLM18BD252SN1B	2500±25%	2500	150		1.5	1.6	
	BLM18TG121TN1D BLM18TG121TN1B	120±25%	120	200		0.25	0.3	For general use (Thin type)
	BLM18TG221TN1D BLM18TG221TN1B	220±25%	220	200		0.3	0.4	
	BLM18TG601TN1D BLM18TG601TN1B	600±25%	600	200		0.45	0.6	
	BLM18TG102TN1D BLM18TG102TN1B	1000±25%	1000	100		0.6	0.8	
	BLM18SG260TN1D BLM18SG260TN1B	26±25%	26	6000*1	1000*1	0.007	0.012	For DC power line (Thin type)
	BLM18SG700TN1D BLM18SG700TN1B	70±25%	70	4000*1	1000*1	0.020	0.030	
	BLM18SG121TN1D BLM18SG121TN1B	120±25%	120	3000*1	1000*1	0.025	0.035	
	BLM18SG221TN1D BLM18SG221TN1B	220±25%	220	2500*1	1000*1	0.040	0.055	
	BLM18SG331TN1D BLM18SG331TN1B	330±25%	330	1500*1	1000*1	0.070	0.085	
	BLM18SN220TN1D BLM18SN220TN1B	22±7	22	8000*1	5000*1	0.004	0.005	
	BLM18KG260TN1D BLM18KG260TN1B	26±25%	26	6000*1	4000*1	0.007	0.012	
	BLM18KG300TN1D BLM18KG300TN1B	30±25%	30	5000*1	3300*1	0.010	0.015	
	BLM18KG700TN1D BLM18KG700TN1B	70±25%	70	3500*1	2200*1	0.022	0.032	
	BLM18KG101TN1D BLM18KG101TN1B	100±25%	100	3000*1	1900*1	0.030	0.040	
	BLM18KG121TN1D BLM18KG121TN1B	120±25%	120	3000*1	1900*1	0.030	0.040	

• Operating Temperature : -55°C to +125°C • Storage Temperature : -55°C to +125°C

(*1)In case of Rated current is more than 1A, Rated Current is derated as right figure depending on the operating temperature.

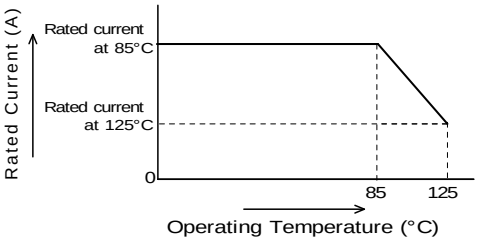

4.Style and Dimensions

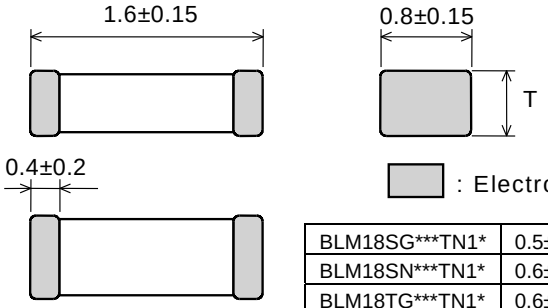

BLM18SG***TN1*	0.5±0.15
BLM18SN***TN1*	0.6±0.15
BLM18TG***TN1*	0.6±0.1
BLM18KG***TN1*	0.6±0.15
BLM18*****SN1*	0.8±0.15

(in mm)

■ Equivalent Circuit

(Resistance element becomes dominant at high frequencies.)

■ Unit Mass (Typical value)
BLM18*****SN1*:0.005g
BLM18*****TN1*:0.004g

5.Marking

No marking.

6.Standard Testing Conditions

< Unless otherwise specified >
Temperature : Ordinary Temp. (15 °C to 35 °C)
Humidity : Ordinary Humidity (25%(RH) to 85%(RH))

< In case of doubt >
Temperature : 20°C±2 °C
Humidity : 60%(RH) to 70%(RH)
Atmospheric pressure : 86kPa to 106kPa

7.Specifications

7-1.Electrical Performance

No.	Item	Specification	Test Method
7-1-1	Impedance	Meet item 3.	Measuring Frequency : 100MHz±1MHz Measuring Equipment : KEYSIGHT 4991A or the equivalent Test Fixture : KEYSIGHT 16192A or the equivalent
7-1-2	DC Resistance	Meet item 3.	Measuring Equipment : Digital multi meter For BLM18SN_TN Measuring Equipment : YOKOGAWA 755611 or the equivalent Test Fixture : KEYSIGHT 16044A or the equivalent ＊Except resistance of the Substrate and Wire

7-2.Mechanical Performance

<table>
<tr><th>No.</th><th>Item</th><th>Specification</th><th>Test Method</th></tr>
<tr><td>7-2-1</td><td>Appearance and Dimensions</td><td>Meet item 4.</td><td>Visual Inspection and measured with Slide Calipers.</td></tr>
<tr><td>7-2-2</td><td>Bonding Strength</td><td>Meet Table 1.

Table 1
<table><tr><td>Appearance</td><td>No damage</td></tr><tr><td>Impedance Change (at 100MHz)</td><td>Within ±30%
(for BLM18SN_TN Within ±50%)</td></tr><tr><td>DC Resistance</td><td>Meet item 3.</td></tr></table></td><td>It shall be soldered on the substrate.
Applying Force(F) : 6.8N
Applying Time : 5s±1s
Applied direction :Parallel to substrate
 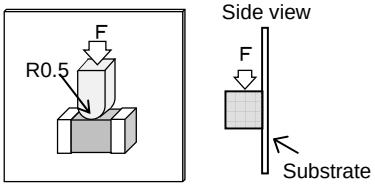 </td></tr>
<tr><td>7-2-3</td><td>Bending Strength</td><td></td><td>It shall be soldered on the substrate.
Substrate: Glass-epoxy 100mm×40mm×1.6mm
Deflection : 1.0mm
Speed of Applying Force : 0.5mm/s
Keeping Time : 30s
 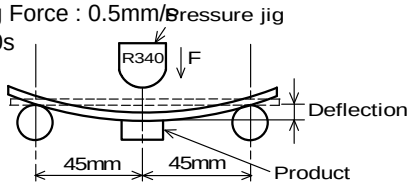 </td></tr>
<tr><td>7-2-4</td><td>Vibration</td><td></td><td>It shall be soldered on the substrate.
Oscillation Frequency : 10Hz to 55Hz to 10Hz for 1 min
Total Amplitude : 1.5mm
Testing Time : A period of 2 hours in each of 3 mutually perpendicular directions. (Total 6 h)</td></tr>
<tr><td>7-2-5</td><td>Resistance to Soldering Heat</td><td>Meet Table 2.

Table 2
<table><tr><td>Appearance</td><td>No damage</td></tr><tr><td>Impedance Change (at 100MHz)</td><td>Within ±30%
(for BLM18KG Within ±40%)
(for BLM18SN_TN Within ±50%)</td></tr><tr><td>DC Resistance</td><td>Meet item 3.</td></tr></table></td><td>Pre-Heating : 150°C±10°C, 60s～90s
Solder : Sn-3.0Ag-0.5Cu
Solder Temperature : 270°C±5°C
Immersion Time : 10s±0.5s
Immersion and emersion rates : 25mm/s
Then measured after exposure in the room condition for 48h±4h.</td></tr>
<tr><td>7-2-6</td><td>Drop</td><td>Products shall be no failure after tested.</td><td>It shall be dropped on concrete or steel board.
Method : free fall
Height : 75cm
Attitude from which the product is dropped : 3 direction
The number of times : 3 times for each direction(Total 9 times)</td></tr>
<tr><td>7-2-7</td><td>Solderability</td><td>The electrodes shall be at least 95% covered with new solder coating.</td><td>Flux : Ethanol solution of rosin,25(wt)%
Pre-Heating : 150°C±10°C, 60s～90s
Solder : Sn-3.0Ag-0.5Cu
Solder Temperature : 240°C±5°C
Immersion Time : 3s±1s
Immersion and emersion rates : 25mm/s</td></tr>
</table>

7-3.Environmental Performance

It shall be soldered on the substrate.

<table>
<tr><th>No.</th><th>Item</th><th>Specification</th><th>Test Method</th></tr>
<tr><td>7-3-1</td><td>Temperature Cycle</td><td>Meet Table 3.

Table 3
<table><tr><td>Appearance</td><td>No damage</td></tr><tr><td>Impedance Change (at 100MHz)</td><td>Within ±30%
(for BLM18KG Within-10%to+50%)
(for BLM18SN_TN Within ±50%)</td></tr><tr><td>DC Resistance</td><td>Meet item 3.</td></tr></table></td><td>1 cycle:
1 step:-55 °C(+0 °C,-3 °C) / 30min±3min
2 step:Ordinary temp. / 10min to 15min
3 step:+125 °C(+3 °C,-0 °C) / 30min±3min
4 step: Ordinary temp. / 10min to 15min
Total of 100 cycles
Then measured after exposure in the room condition for 48h±4h.</td></tr>
<tr><td>7-3-2</td><td>Humidity</td><td rowspan="3">Meet Table 1.</td><td>Temperature : 40°C±2°C
Humidity : 90%(RH) to 95%(RH)
Time : 1000h(+48h,-0h)
Then measured after exposure in the room condition for 48h±4h.</td></tr>
<tr><td>7-3-3</td><td>Heat Life</td><td>Temperature : 125°C±3°C
(in case of Rated current is more than 1A, do the test at : +85 °C±3°C)
Applying Current : Rated Current
Time : 1000h(+48h,-0h)
Then measured after exposure in the room condition for 48h±4h.</td></tr>
<tr><td>7-3-4</td><td>Cold Resistance</td><td>Temperature : -55±2°C
Time : 1000h(+48h,-0h)
Then measured after exposure in the room condition for 48h±4h.</td></tr>
</table>

8.Specification of Packaging

8-1.Appearance and Dimensions (8mm-wide paper tape)

Part Number	Type	Appearance and Dimensions
BLM18RK***SN1D BLM18PG***SN1D BLM18AG***SN1D BLM18B****SN1D BLM18KG****N1D BLM18S****SN1D BLM18SN***TN1D	8mm- wide Paper tape 4mm-pitch	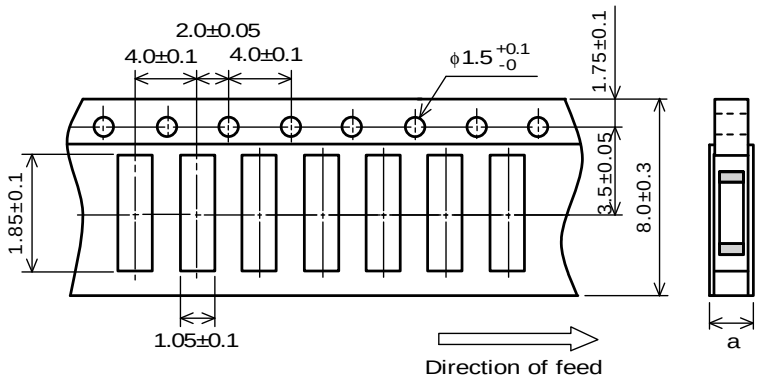 Item: BLM18*****SN1D — Dimension "a": 1.1 max. Item: BLM18KG***TN1D, BLM18SN***TN1D — Dimension "a": 0.85 max.
BLM18SG***TN1D BLM18TG***TN1D	8mm- wide Paper tape 2mm-pitch	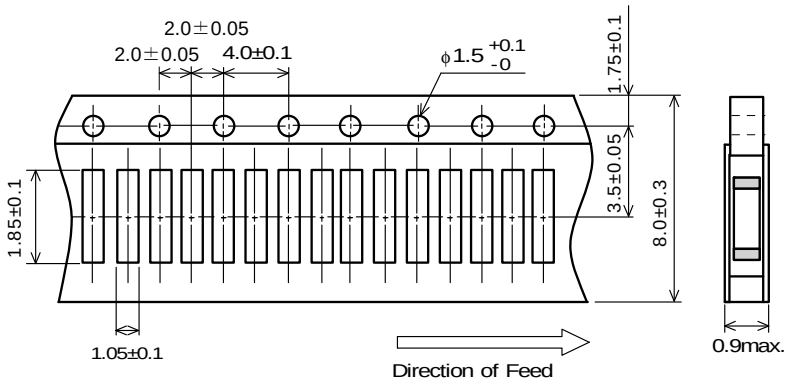

(in mm)

(1) Taping
Products shall be packaged in the cavity of the base tape continuously and sealed by top tape and bottom tape.
(2) Sprocket hole:The sprocket holes are to the right as the tape is pulled toward the user.
(3) Spliced point:The base tape and top tape have no spliced point
(4) Cavity:There shall not be burr in the cavity.
(5) Missing components number
Missing components number within 0.1% of the number per reel or 1 pc., whichever is greater, and are not continuous. The specified quantity per reel is kept.

8-2.Tape Strength

(1)Pull Strength

Top tape	5N min.
Bottom tape	

(2)Peeling off force of Top tape
0.1N to 0.6N (Minimum value is typical.)
*Speed of Peeling off:300mm/min

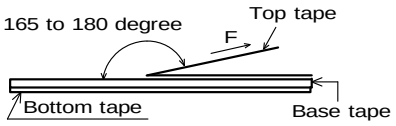

8-3.Taping Condition

(1)Standard quantity per reel

Type	Quantity per 180mm reel
BLM18(except BLM18SG/BLM18TG)	4000 pcs. / reel
BLM18SG/BLM18TG	10000 pcs. / reel

(2)There shall be leader-tape (top tape and empty tape) and trailer- tape (empty tape) as follows.

(3)On paper tape, the top tape and the base tape shall not be adhered at the tip of the empty leader tape for more than 5 pitch.

(4)Marking for reel

The following items shall be marked on a label and the label is stuck on the reel.

(Customer part number, MURATA part number, Inspection number(∗1), RoHS Marking(∗2), Quantity, etc)

∗1) « Expression of Inspection No. » □□ OOOO ×××
(1) (2) (3)

(1) Factory Code
(2) Date First digit : Year / Last digit of year
Second digit : Month / Jan. to Sep. → 1 to 9, Oct. to Dec. → O, N, D
Third, Fourth digit : Day
(3) Serial No.

∗2) « Expression of RoHS Marking » ROHS – Y (△)
(1) (2)

(1) RoHS regulation conformity parts.
(2) MURATA classification number

(5)Outside package

These reels shall be packed in the corrugated cardboard package and the following items shall be marked on a label and the label is stuck on the box.

(Customer name, Purchasing order number, Customer part number, MURATA part number, RoHS discrimination(∗2), Quantity, etc)

(6)Dimensions of reel and taping(leader-tape, trailer-tape)

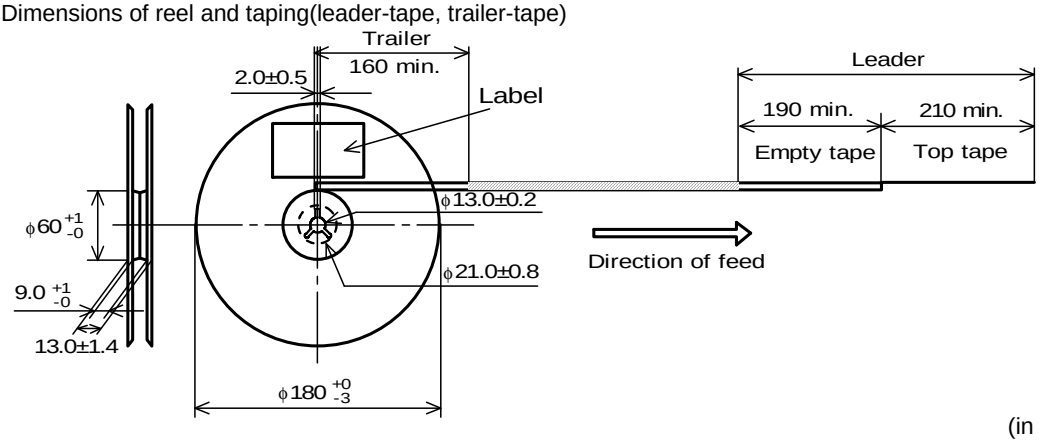

(in mm)

8-4. Specification of Outer Case

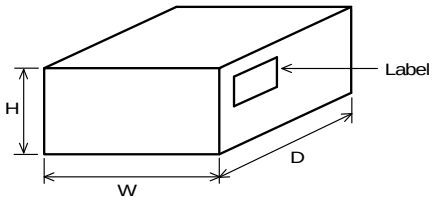

Outer Case Dimensions (mm)			Standard Reel Quantity in Outer Case (Reel)
W	D	H	
186	186	93	5

∗ Above Outer Case size is typical. It depends on a quantity of an order.

9. ⚠ Caution

9-1.Surge current

Excessive surge current (pulse current or rush current) than specified rated current applied to the product may cause a critical failure, such as an open circuit, burnout caused by excessive temperature rise.
Please contact us in advance in case of applying the surge current.

9-2.Limitation of Applications

Please contact us before using our products for the applications listed below which require especially high reliability for the prevention of defects which might directly cause damage to the third party's life, body or property.

(1) Aircraft equipment
(2) Aerospace equipment
(3) Undersea equipment
(4) Power plant control equipment
(5) Medical equipment
(6) Disaster prevention / crime prevention equipment
(7) Traffic signal equipment
(8) Transportation equipment (vehicles,trains,ships,etc.)
(9) Data-processing equipment
(10) Applications of similar complexity and /or reliability requirements to the applications listed in the above

10. Notice

This product is designed for solder mounting.
Please consult us in advance for applying other mounting method such as conductive adhesive.

10-1.Land pattern designing

• Standard land dimensions

< For BLM18 series (except BLM18P/BLM18S/BLM18K type) >

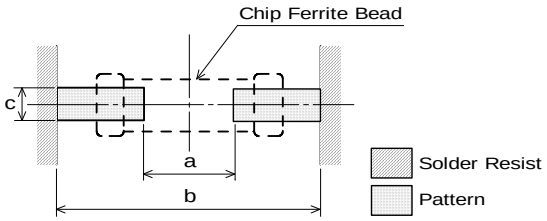

Type	Soldering	a	b	c
BLM18 (except18P/18S/ BLM18K type)	Flow	0.8	2.5	0.7
	Reflow	0.7	2.0	0.7

(in mm)

< For BLM18P/BLM18S/BLM18K type >

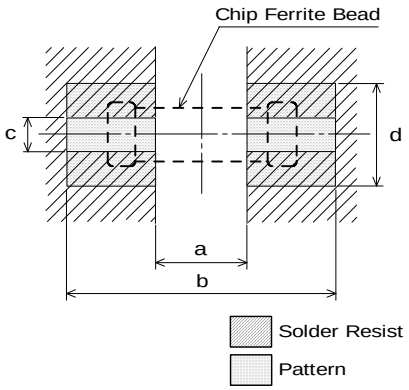

Type	Rated Current (A)	Soldering	a	b	c	Land pad thickness and dimension d		
						18μm	35μm	70μm
BLM18P BLM18S BLM18K	0.5 to 1.5	Flow/ Reflow	Flow 0.8 Reflow 0.7	Flow 2.5 Reflow 2.0	0.7	0.7	0.7	0.7
	1.7 to 2.5					1.2	0.7	0.7
	3 to 4					2.4	1.2	0.7
	5 to 6					6.4	3.3	1.65
BLM18SN	8					-	6.4	3.3

(in mm)

∗The excessive heat by land pads may cause deterioration at joint of products with substrate.

10-2.Soldering Conditions

Products can be applied to reflow and flow soldering.

(1) Flux,Solder

Flux	Use rosin-based flux, but not highly acidic flux (with chlorine content exceeding 0.2(wt)%.) Do not use water-soluble flux.
Solder	Use Sn-3.0Ag-0.5Cu solder Standard thickness of solder paste : 100 μm to 200 μm

(2) Soldering conditions

• Pre-heating should be in such a way that the temperature difference between solder and ferrite surface is limited to 150℃ max. Also cooling into solvent after soldering should be in such a way that the temperature difference is limited to 100℃ max.
Insufficient pre-heating may cause cracks on the ferrite, resulting in the deterioration of product quality.

• Standard soldering profile and the limit soldering profile is as follows.
The excessive limit soldering conditions may cause leaching of the electrode and / or resulting in the deterioration of product quality.

(3)soldering profile

☐Flow soldering profile

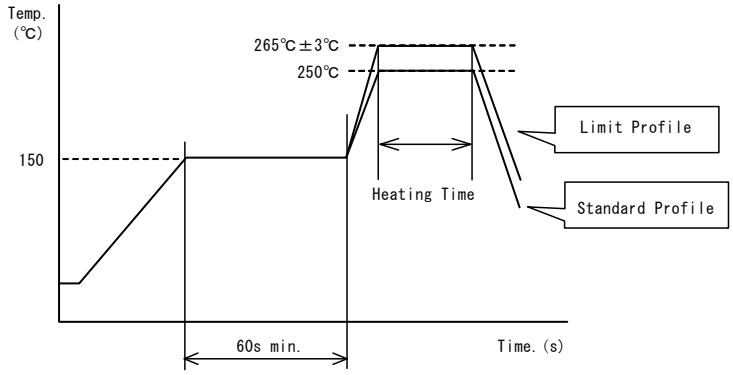

	Standard Profile	Limit Profile
Pre-heating	150℃、60s min.	
Heating	250℃、4～6s	265℃±3℃、5s max.
Cycle of flow	2 times	2 times

☐Reflow soldering profile

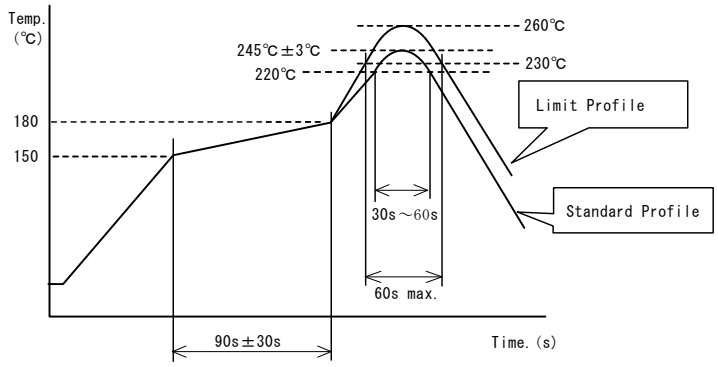

	Standard Profile	Limit Profile
Pre-heating	150～180°C 、90s±30s	
Heating	above 220°C、30s～60s	above 217°C、60s~150s
Peak temperature	245±3°C	260°C,10s
Cycle of reflow	2 times	2 times

10-3.Reworking with soldering iron

- Pre-heating: 150°C, 1 min
- Tip temperature: 350°C max.
- Soldering time : 3(+1,-0) seconds.
- Soldering iron output: 80W max.
- Tip diameter: ϕ 3mm max.
- Times : 2times max.

Note :Do not directly touch the products with the tip of the soldering iron in order to prevent the crack on the ferrite material due to the thermal shock.

10-4.Solder Volume

Solder shall be used not to be exceeded as shown below.

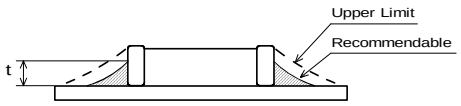

1/3T≦t≦T
(T: Chip thickness)

Accordingly increasing the solder volume, the mechanical stress to product is also increased. Exceeding solder volume may cause the failure of mechanical or electrical performance.

10-5.Attention regarding P.C.B. bending

The following shall be considered when designing and laying out P.C.B.'s.

(1) P.C.B. shall be designed so that products are not subject to the mechanical stress for board warpage.

<Products direction>

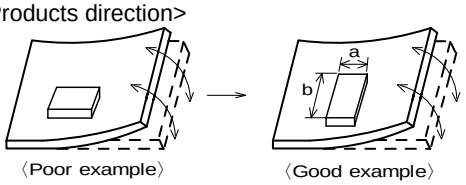

Products shall be located in the sideways direction (Length: a<b) to the mechanical stress.

(2)Components location on P.C.B. separation.

It is effective to implement the following measures, to reduce stress in separating the board.
It is best to implement all of the following three measures; however, implement as many measures as possible to reduce stress.

Contents of Measures	Stress Level
(1) Turn the mounting direction of the component parallel to the board separation surface.	A > D *1
(2) Add slits in the board separation part.	A > B
(3) Keep the mounting position of the component away from the board separation surface.	A > C

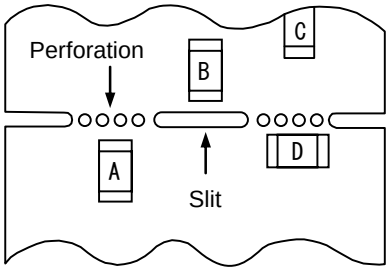

*1 A > D is valid when stress is added vertically to the perforation as with Hand Separation.
If a Cutting Disc is used, stress will be diagonal to the PCB, therefore A > D is invalid.

(3) Mounting Components Near Screw Holes

When a component is mounted near a screw hole, it may be affected by the board deflection that occurs during the tightening of the screw. Mount the component in a position as far away from the screw holes as possible.

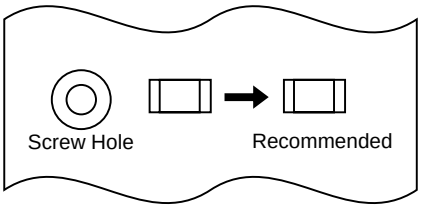

10-6.Mounting density

Add special attention to radiating heat of products when mounting the inductor near the products with heating.
The excessive heat by other products may cause deterioration at joint of this product with substrate.

10-7. Operating Environment

Do not use this product under the following environmental conditions, on deterioration of the Insulation Resistance of the Ferrite material and/or corrosion of Inner Electrode may result from the use.

(1) in the corrodible atmosphere such as acidic gases, alkaline gases, chlorine, sulfur gases, organic gases and etc. (the sea breeze, Cl_2, H_2S, NH_3, SO_2, NO_2,etc)
(2) in the atmosphere where liquid such as organic solvent, may splash on the products
(3) in the atmosphere where the temperature / humidity changes rapidly and it is easy to dew

10-8. Resin coating

The impedance value may change and/or it may affect on the product's performance due to high cure-stress of resin to be used for coating / molding products. So please pay your careful attention when you select resin.
In prior to use, please make the reliability evaluation with the product mounted in your application set.

10-9.Cleaning Conditions

Products shall be cleaned on the following conditions.

(1)Cleaning temperature shall be limited to 60°C max. (40°C max. for IPA.)

(2)Ultrasonic cleaning shall comply with the following conditions, avoiding the resonance phenomenon at the mounted products and P.C.B.

Power:20W/ℓ max. Frequency:28kHz to 40kHz Time:5 min max.

(3)Cleaner

1.Alternative cleaner

- Isopropyl alcohol (IPA)

2.Aqueous agent

- PINE ALPHA ST-100S

(4)There shall be no residual flux and residual cleaner after cleaning.

In the case of using aqueous agent, products shall be dried completely after rinse with de-ionized water in order to remove the cleaner.

(5)Other cleaning

Please contact us.

10-10. Handling of a substrate

After mounting products on a substrate, do not apply any stress to the product caused by bending or twisting to the substrate when cropping the substrate, inserting and removing a connector from the substrate or tightening screw to the substrate.

Excessive mechanical stress may cause cracking in the product.

Bending

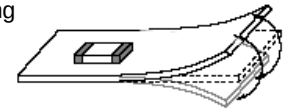

Twisting

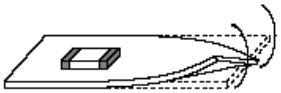

10-11.Storage Conditions

(1)Storage period

Use the products within 6 months after delivered.

Solderability should be checked if this period is exceeded.

(2)Storage conditions

- Products should be stored in the warehouse on the following conditions.

  Temperature : -10°C to 40°C

  Humidity : 15% to 85% relative humidity

  No rapid change on temperature and humidity
- Don't keep products in corrosive gases such as sulfur, chlorine gas or acid, or it may cause oxidization of electrode, resulting in poor solderability.
- Products should be stored on the palette for the prevention of the influence from humidity, dust and so on.
- Products should be stored in the warehouse without heat shock, vibration, direct sunlight and so on.
- Products should be stored under the airtight packaged condition.

(3)Delivery

Care should be taken when transporting or handling product to avoid excessive vibration or mechanical shock.

11 . ⚠ Note

(1)Please make sure that your product has been evaluated in view of your specifications with our product being mounted to your product.

(2)You are requested not to use our product deviating from the reference specifications.

(3)The contents of this reference specification are subject to change without advance notice. Please approve our product specifications or transact the approval sheet for product specifications before ordering.