THIS DRAWING IS UNPUBLISHED. RELEASED FOR PUBLICATION 2006
© COPYRIGHT 2006 - ALL RIGHTS RESERVED.

LOC	DIST
GT	-

REVISIONS

P	LTR	DESCRIPTION	DATE	DWN	APVD
	C4	REVISED PER ECO-11-005150	11MAY2011	RK	HMR
	C5	SEE E-13-004481	12MAR2013	SK	RH
	C6	SEE E-18-006341	31JUL2018	JP	KPY

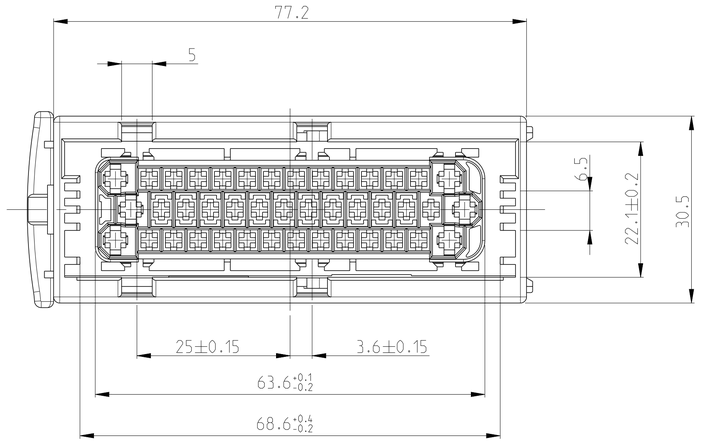

B-B

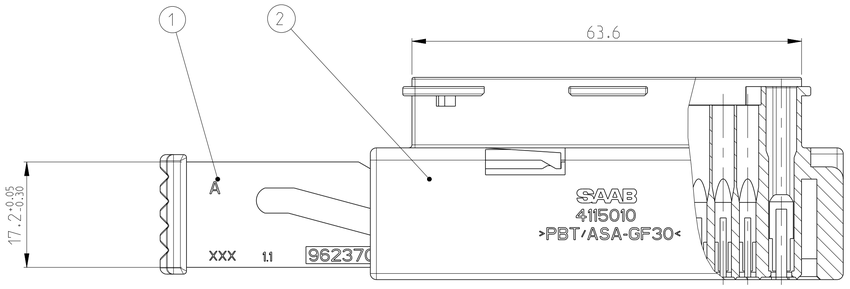

A-A

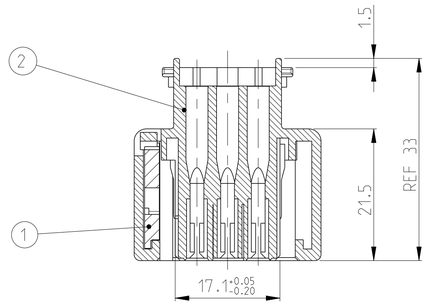

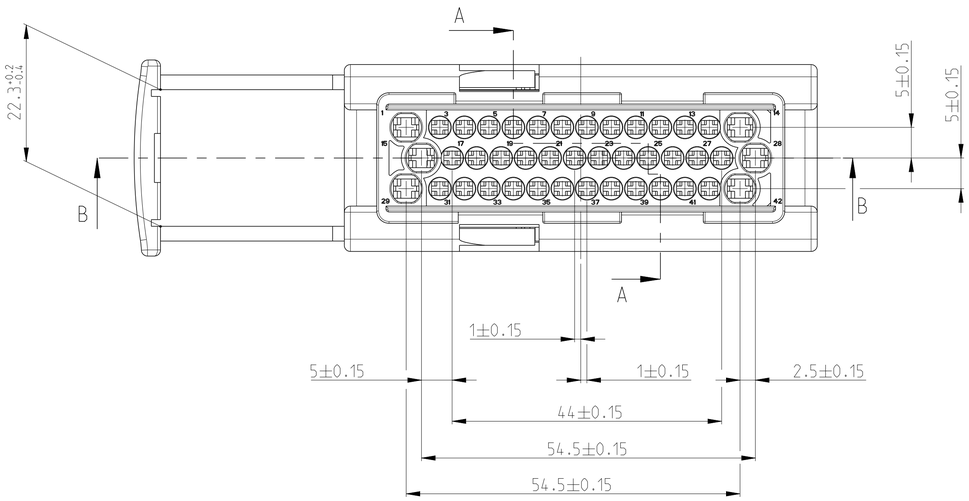

1 MATERIAL MARKING
Materialbezeichnung

1-...-1 2-...-1 5-...-1	>PBT/ASA-GF30<
~~3-...-1~~ ~~4-...-1~~	~~>PBTP<~~

2 DELIVERY POSITION
SLIDE IN CLOSED POSITION
Anlieferungszustand
Assy in Endraststellung montiert

1-...-1 AS SHOWN
wie gezeichnet

2

Kodierung A1

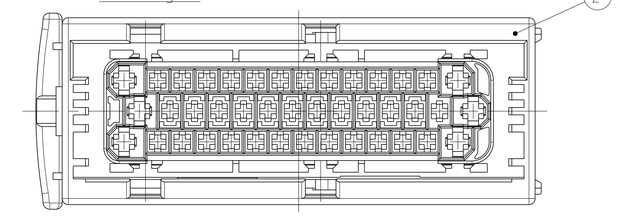

Kodierung B1

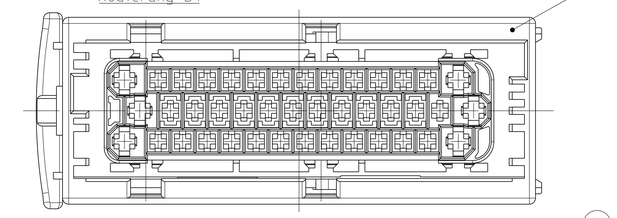

Kodierung C1

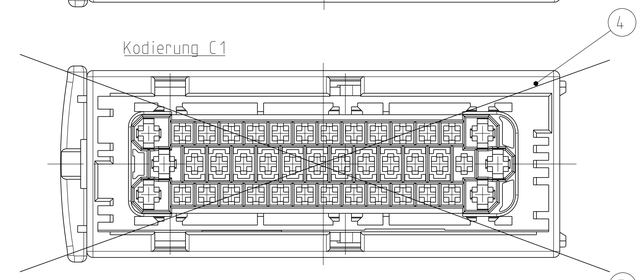

Kodierung D1

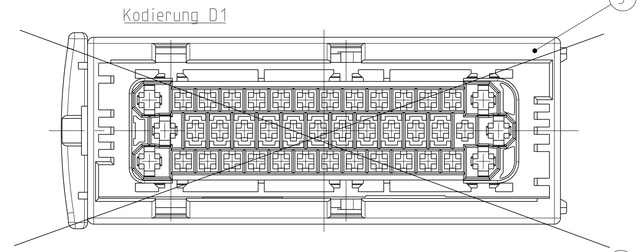

Kodierung N

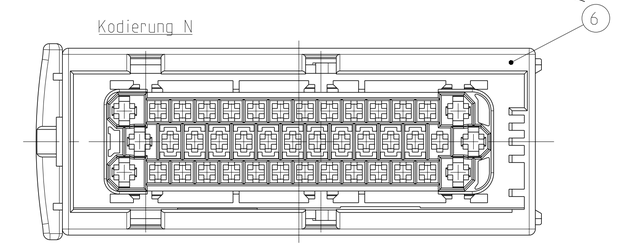

1					G	5-962369-1	42POS. REC. HSG. COD. N	PBT/ASA-GF30	WHITE	6
	-				~~4~~	~~4-962369-1~~	~~42POS. REC. HSG. COD. D1~~	~~PBT/ASA-GF30~~	~~BROWN~~	~~5~~
		-			~~4~~	~~3-962369-1~~	~~42POS. REC. HSG. COD. C1~~	~~PBT/ASA-GF30~~	~~BLUE~~	~~4~~
			1		G	2-962369-1	42POS. REC. HSG. COD. B1	PBT/ASA-GF30	GREY	3
				1	G	1-962369-1	42POS. REC. HSG. COD. A1	PBT/ASA-GF30	BLACK	2
1	1	1	1	1	A	0-962370-1	SLIDE FOR 42POS. REC. HSG.	PBT-GF30	RED	1
				QTY	REV	PN	DESCRIPTION	MATERIAL	COLOUR	POS
C	-	-	C	C	ASSY REVISION					
5-...-1	4-...-1	3-...-1	2-...-1	1-...-1	ASSY ORDER					

C6

THIS DRAWING IS A CONTROLLED DOCUMENT.

DIMENSIONS: mm

TOLERANCES UNLESS OTHERWISE SPECIFIED:
0 PLC ±0.5
1 PLC ±0.5
2 PLC ±0.5
3 PLC ±
4 PLC ±
ANGLES ±2°

MATERIAL: see table
FINISH: - -

DWN L. Nguyen 20APR2006
CHK T. Kilian 06SEP2006
APVD -
PRODUCT SPEC -
APPLICATION SPEC -
WEIGHT -

TE Connectivity

NAME: 42POS. REC. HSG. MT2/JPT, ASS'Y
42pol. Mix Kontaktgehaeuse
MT2/JPT, Ass'y

SIZE	CAGE CODE	DRAWING NO	RESTRICTED TO
A1	00779	C-963226	-

Customer Drawing | SCALE 2:1 | SHEET 1 OF 1 | REV C6

4805 (3/11)