THIS DRAWING IS UNPUBLISHED. RELEASED FOR PUBLICATION - , - .
© COPYRIGHT - By - ALL RIGHTS RESERVED.

LOC	DIST
AD	00

REVISIONS

P	LTR	DESCRIPTION	DATE	DWN	APVD
	B3	REVISED PER ECO-14-000419	10JAN2014	KH	RH

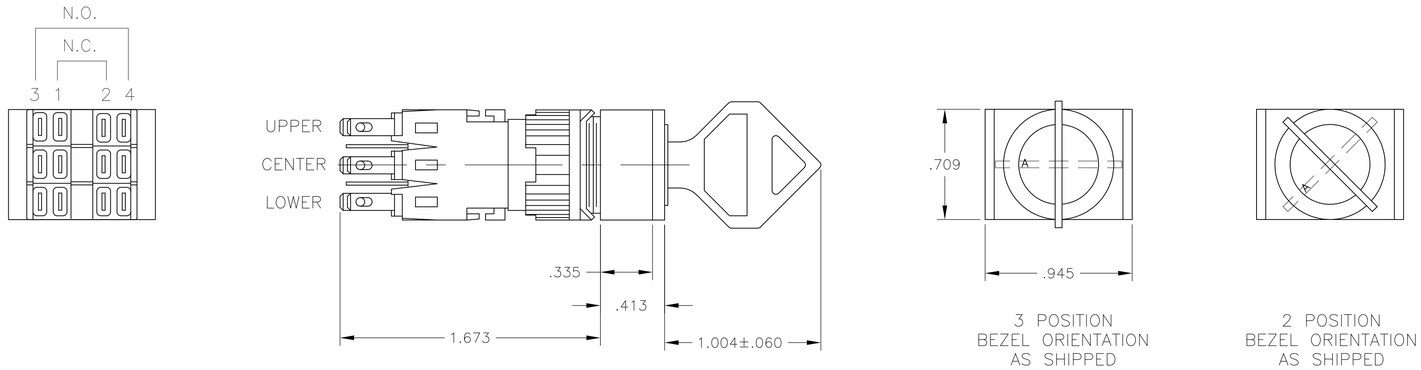

3 POSITION
BEZEL ORIENTATION
AS SHIPPED

2 POSITION
BEZEL ORIENTATION
AS SHIPPED

SPECIFICATIONS:

CONTACT RATING: 0.4VA @ 20VDC OR PEAK AC.
5 AMPS @ 250VAC OR 24VDC (RESISTIVE)
INITIAL CONTACT RESISTANCE: 20 MILLIOHMS MAX
INSULATION RESISTANCE: 100 MEGOHMS MIN
DIELECTRIC STRENGTH: 1500 VOLTS RMS @ SEA LEVEL
CONTACTS: GOLD PLATE OVER SILVER CLAD
LIFE EXPECTANCY: 100,000 OPERATIONS AT RATED CURRENT
OPERATING TEMPERATURE RANGE: -20°C TO +50°C
PANEL THICKNESS: NON-OILTIGHT, .230 MAX
OILTIGHT, .210 MAX
UL RECOGNIZED E-51302

OILTIGHT MODELS MEET NEMA 1, 12, 13 REQUIRMENTS

BEZEL MAY BE ROTATED IN 45° INCREMENTS BY PULLING STRAIGHT BACK INTO THREADED SECTION, ROTATING, AND PUSHING BACK INTO POSITION

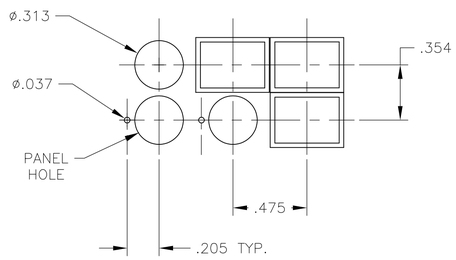

PANEL CUTOUT
SCALE 1:1

OBSOLETE	3 POSN MOMENTARY (RIGHT), KEY PULL (LEFT)	2 N.O. & N.C.	165J7A22	164J7A22	–	–
	3 POSN MAINTAINED, KEY PULL (CENTER)	3 N.O. & N.C.	165J3E33	164J3E33	–	–
	3 POSN MAINTAINED, KEY PULL (CENTER)	2 N.O. & N.C.	165J3E22	164J3E22	–	–
	3 POSN MAINTAINED, KEY PULL (RIGHT)	2 N.O. & N.C.	–	164J3D22	–	1-1437569-7
	3 POSN MAINTAINED, KEY PULL (ALL)	3 N.O. & N.C.	165J3C33	164J3C33	1977932-1	–
	3 POSN MAINTAINED, KEY PULL (ALL)	2 N.O. & N.C.	165J3C22	164J3C22	–	1-1437569-6
	3 POSN MAINTAINED, KEY PULL (LEFT)	3 N.O. & N.C.	165J3A33	164J3A33	–	1-1437569-5
	3 POSN MAINTAINED, KEY PULL (LEFT)	2 N.O. & N.C.	165J3A22	164J3A22	–	–
	2 POSN MAINTAINED, KEY PULL (BOTH)	3 N.O. & N.C.	165J2B33	164J2B33	–	–
	2 POSN MAINTAINED, KEY PULL (BOTH)	2 N.O. & N.C.	165J2B22	164J2B22	–	1-1437569-4
	2 POSN MAINTAINED, KEY PULL (BOTH)	1 N.O. & N.C.	165J2B11	164J2B11	1571637-1	1-1437569-3
	2 POSN MAINTAINED, KEY PULL (LEFT)	3 N.O. & N.C.	165J2A33	164J2A33	–	–
	2 POSN MAINTAINED, KEY PULL (LEFT)	2 N.O. & N.C.	165J2A22	164J2A22	–	1-1437569-2
	2 POSN MAINTAINED, KEY PULL (LEFT)	1 N.O. & N.C.	165J2A11	164J2A11	4-1437569-7	1-1437569-1
PRELIMINARY	2 POSN MAINTAINED, KEY PULL (LEFT)	–	–	164J2A	–	147519-1
	2 POSN MOMENTARY (RIGHT), KEY PULL (LEFT)	3 N.O. & N.C.	–	164J0A33	–	–
	2 POSN MOMENTARY (RIGHT), KEY PULL (LEFT)	2 N.O. & N.C.	–	164J0A22	–	1-1437569-0
	2 POSN MOMENTARY (RIGHT), KEY PULL (LEFT)	1 N.O. & N.C.	–	164J0A11	–	1437569-9
PRELIMINARY	2 POSN MOMENTARY (RIGHT), KEY PULL (LEFT)	–	–	164J0A	–	147518-1
	ACTION	CONTACTS	OILTIGHT	NON-OILTIGHT	OILTIGHT	NON-OILTIGHT
			AUGAT PT NO		PART NO	

DIRECTION	3 POSITION (MAINTAINED & MOMENTARY)				
	UPPER	LOWER	UPPER	CENTER	LOWER
←	1 2 3 4	1 2 3 4	1 2 3 4	1 2 3 4	1 2 3 4
↑	1 2 3 4	1 2 3 4	1 2 3 4	1 2 3 4	1 2 3 4
→	1 2 3 4	1 2 3 4	1 2 3 4	1 2 3 4	1 2 3 4

DIRECTION	2 POSITION (MAINTAINED & MOMENTARY)					
	UPPER	UPPER	LOWER	UPPER	CENTER	LOWER
↖	1 2 3 4	1 2 3 4	1 2 3 4	1 2 3 4	1 2 3 4	1 2 3 4
↗	1 2 3 4	1 2 3 4	1 2 3 4	1 2 3 4	1 2 3 4	1 2 3 4

THIS DRAWING IS A CONTROLLED DOCUMENT.

DIMENSIONS: INCHES

TOLERANCES UNLESS OTHERWISE SPECIFIED:
0 PLC ± –
1 PLC ± –
2 PLC ± –
3 PLC ± .010
4 PLC ± –
ANGLES ± 1°

MATERIAL –
FINISH –

DWN	R BROWN	23OCT03
CHK	M ZITTO	23OCT03
APVD	M ZITTO	23OCT03
PRODUCT SPEC	–	
APPLICATION SPEC	–	
WEIGHT	–	

TE Connectivity

NAME: 164/165 J SERIES KEYLOCK SWITCH –

SIZE	CAGE CODE	DRAWING NO	RESTRICTED TO
A1	00779	C-1437569-8	–

CUSTOMER DRAWING | SCALE 2:1 | SHEET 1 OF 1 | REV B3

4805 (3/11)

Mouser Electronics

Authorized Distributor

Click to View Pricing, Inventory, Delivery & Lifecycle Information:

TE Connectivity:

164J0A22