THIS DRAWING IS UNPUBLISHED. RELEASED FOR PUBLICATION - ,N/A .
© COPYRIGHT N/A By - ALL RIGHTS RESERVED.

LOC	DIST
—	—

REVISIONS

P	LTR	DESCRIPTION	DATE	DWN	APVD
	M	REVISED PER ECO-15-016251	13NOV15	KG	CD

1. THIS PLUG WILL MATE WITH ANY 17C2, SIZE 3 RECEPTACLE IN AMPLIMITE SERIES.
2. MAXIMUM WIRE INSULATION TO BE USED WITH THIS PLUG IS ø.068.
3. THIS CONNECTOR ACCEPTS (2) POWER 8, OR COAX PIN CONTACTS IN POSITIONS A1 & A2, PURCHASED SEPARATELY.
4. THIS CONNECTOR ACCEPTS SIZE 20 PIN SIGNAL CONTACTS IN POSITIONS 1 THRU 15, PURCHASED SEPARATELY.

5. UL/CSA DESIGNATION STAMPED IN THIS AREA, OPTIONAL.
6. STEEL PER ASTM-A-109.
7. BRASS PER MIL-C-50 AND ASTM-B-36 UNS NO. C26000.
8. CADMIUM PLATED PER QQ-P-416.
9. GOLD PLATED PER MIL-G-45204 TYPE II, GRADE C, CLASS 1 OVER COPPER PER MIL-C-14550, CLASS IV.
10. WESTINGHOUSE PART NO. 97942-645A935H05 INK STAMPED.
11. FINISH: TIN PER ASTM-B-545 .000400 MIN THK OVER COPPER PER AMS2418 .000050 MIN THK.
12. GROUNDING INDENTS FOR 212506-5 & 5-212506-5 ONLY.
13. FINISH: ZINC PLATE PER ASTM-B-633 .000200-.000400 THK WITH SUPPLEMENTARY CHROMATE (Cr3+).

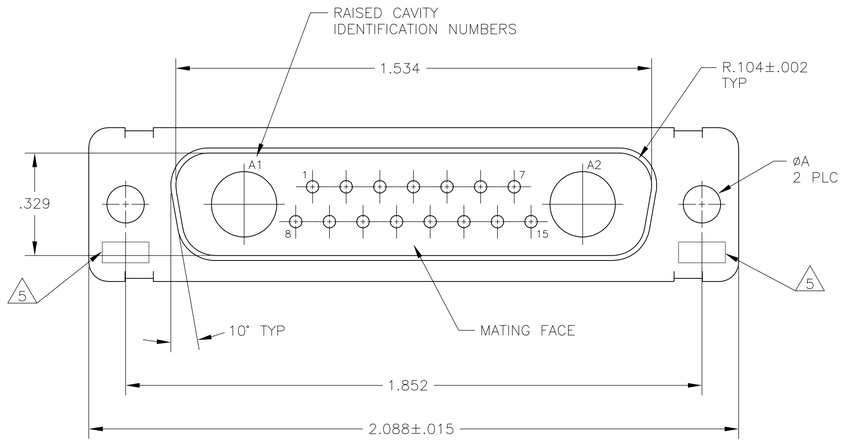

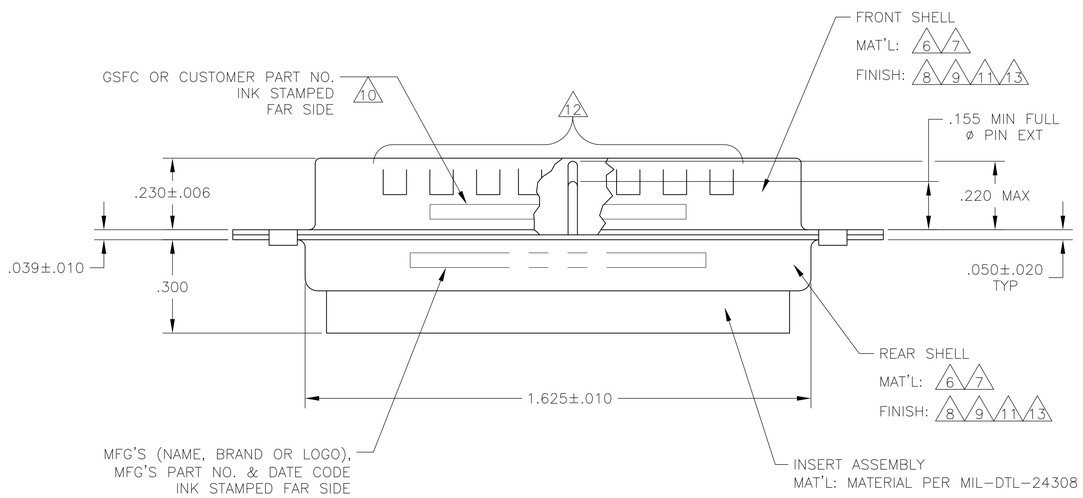

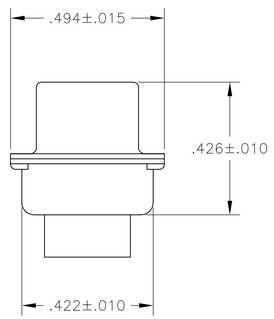

REMARKS	ØA	GSFC P/N	PART NO.
6 13	.120	–	5-212506-1
6 12 11	.120	–	5-212506-5
6 11 12	.120	–	212506-5
7 9	.154	311P405-13S-B-15	212506-4
6 8 10	.120	–	212506-3
7 9	.120	311P405-13S-B-12	212506-2
6 8	.120	–	212506-1

THIS DRAWING IS A CONTROLLED DOCUMENT.

DIMENSIONS: INCHES

TOLERANCES UNLESS OTHERWISE SPECIFIED:
0 PLC ± –
1 PLC ± –
2 PLC ± –
3 PLC ± .005[0.13]
4 PLC ± –
ANGLES ± 0°30'

MATERIAL –
FINISH –

DWN 27-May-15 MANJUNATH G M
CHK 27-May-15 CHARLES THOMAS
APVD 27-May-15 CHARLES THOMAS
PRODUCT SPEC —
APPLICATION SPEC —
WEIGHT —

TE Connectivity

NAME
PLUG ASSEMBLY
AMPLIMITE 17C2
SIZE 3, SERIES 109, COAX MIX

SIZE	CAGE CODE	DRAWING NO	RESTRICTED TO
A1	00779	C-212506	—

CUSTOMER DRAWING | SCALE 4:1 | SHEET 1 OF 1 | REV M

4805 (3/11)

Mouser Electronics

Authorized Distributor

Click to View Pricing, Inventory, Delivery & Lifecycle Information:

TE Connectivity:

212506-1