THIS DRAWING IS UNPUBLISHED. RELEASED FOR PUBLICATION ,19 .
© COPYRIGHT 19 BY - ALL RIGHTS RESERVED.

LOC	DIST
DY	-

REVISIONS

P	LTR	DESCRIPTION	DATE	DWN	APVD
	N3	REVISED PER ECO-11-005139	19MAR11	RK	HMR

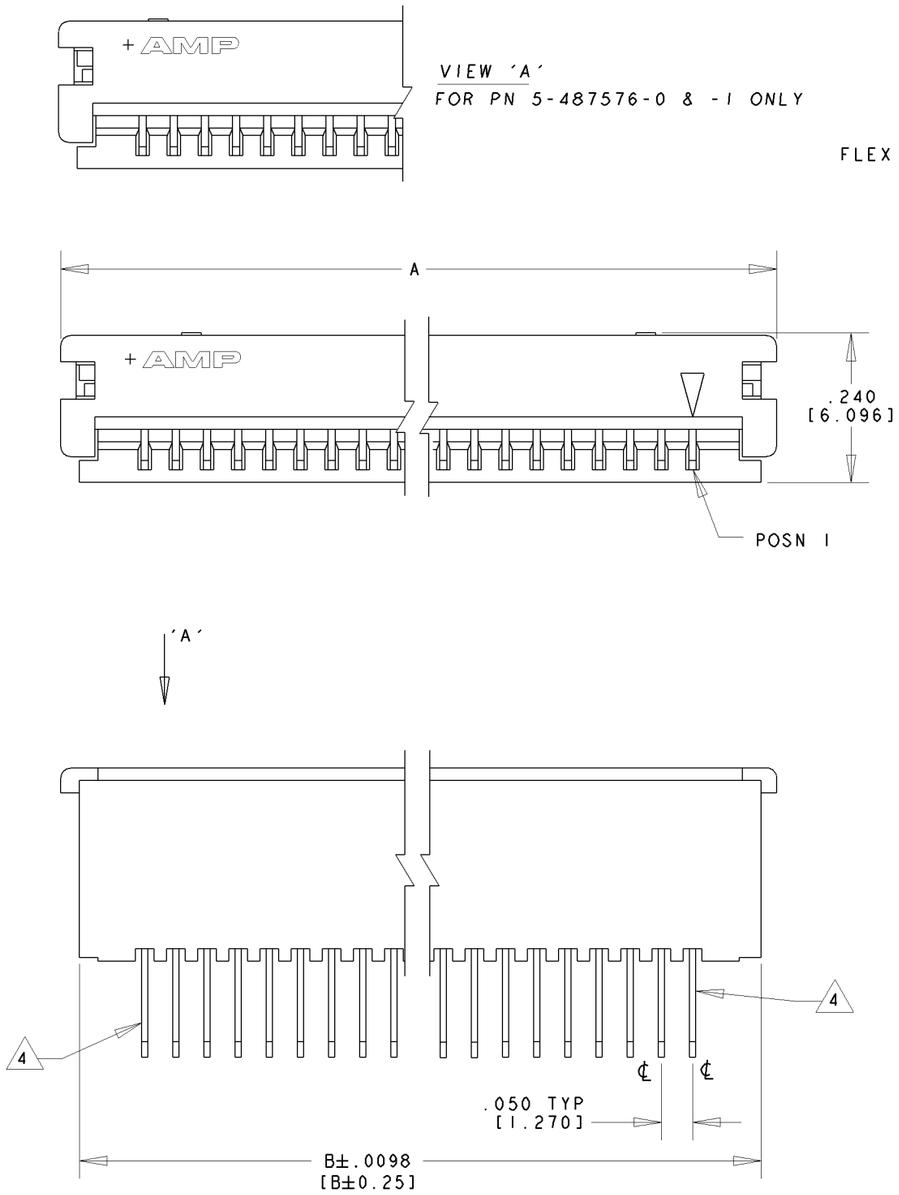

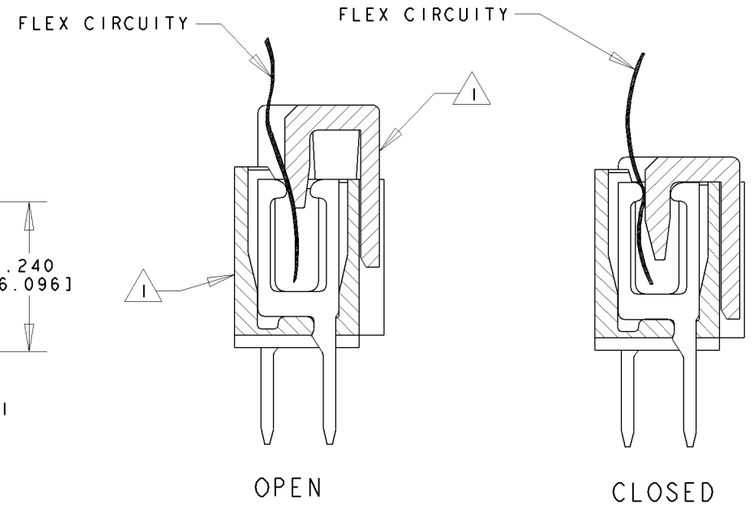

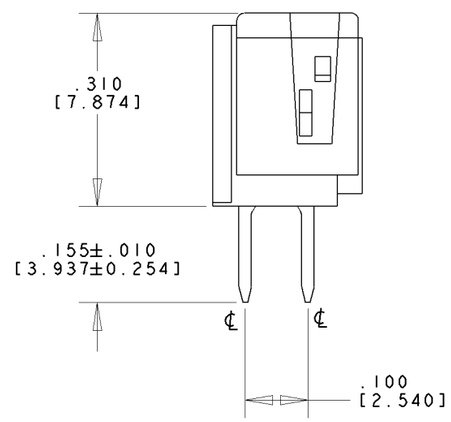

4 #NO	B	A	NO OF POSN	PART NUMBER
1 & 17	1.010 [25.654]	1.070 [27.178]	17	5-487576-9
1 & 11	.710 [18.034]	.770 [19.558]	11	5-487576-3
	.460 [11.684]	.520 [13.208]		5-487576-1
	.410 [10.414]	.470 [11.938]		5-487576-0
	.560 [14.224]	.620 [15.748]	6	4-487576-9
	.510 [12.954]	.570 [14.478]	5	4-487576-8
	2.910 [73.914]	2.970 [75.438]	55	4-487576-7
	2.860 [72.644]	2.920 [74.168]	54	4-487576-6
	2.810 [71.374]	2.870 [72.898]	53	4-487576-5
	2.760 [70.104]	2.820 [71.628]	52	4-487576-4
	2.710 [68.834]	2.770 [70.358]	51	4-487576-3
	2.660 [67.564]	2.720 [69.088]	50	4-487576-2
	2.610 [66.294]	2.670 [67.818]	49	4-487576-1
	2.560 [65.024]	2.620 [66.548]	48	4-487576-0
	2.510 [63.754]	2.570 [65.278]	47	3-487576-9
	2.460 [62.484]	2.520 [64.008]	46	3-487576-8
	2.410 [61.214]	2.470 [62.738]	45	3-487576-7
	2.360 [59.944]	2.420 [61.468]	44	3-487576-6
	2.310 [58.674]	2.370 [60.198]	43	3-487576-5
	2.260 [57.404]	2.320 [58.928]	42	3-487576-4
	2.210 [56.134]	2.270 [57.658]	41	3-487576-3
	2.160 [54.864]	2.220 [56.388]	40	3-487576-2
	2.110 [53.594]	2.170 [55.118]	39	3-487576-1
	2.060 [52.324]	2.120 [53.848]	38	3-487576-0
	2.010 [51.054]	2.070 [52.578]	37	2-487576-9
	1.960 [49.784]	2.020 [51.308]	36	2-487576-8
	1.910 [48.514]	1.970 [50.038]	35	2-487576-7
	1.860 [47.244]	1.920 [48.768]	34	2-487576-6
	1.810 [45.974]	1.870 [47.498]	33	2-487576-5
	1.760 [44.704]	1.820 [46.228]	32	2-487576-4
	1.710 [43.434]	1.770 [44.958]	31	2-487576-3
	1.660 [42.164]	1.720 [43.688]	30	2-487576-2
	1.610 [40.894]	1.670 [42.418]	29	2-487576-1
	1.560 [39.624]	1.620 [41.148]	28	2-487576-0
	1.510 [38.354]	1.570 [39.878]	27	1-487576-9
	1.460 [37.084]	1.520 [38.608]	26	1-487576-8
	1.410 [35.814]	1.470 [37.338]	25	1-487576-7
	1.360 [34.544]	1.420 [36.068]	24	1-487576-6
	1.310 [33.274]	1.370 [34.798]	23	1-487576-5
	1.260 [32.004]	1.320 [33.528]	22	1-487576-4
	1.210 [30.734]	1.270 [32.258]	21	1-487576-3
	1.160 [29.464]	1.220 [30.988]	20	1-487576-2
	1.110 [28.194]	1.170 [29.718]	19	1-487576-1
	1.060 [26.924]	1.120 [28.448]	18	1-487576-0
	1.010 [25.654]	1.070 [27.178]	17	487576-9
	.960 [24.384]	1.020 [25.908]	16	487576-8
	.910 [23.114]	.970 [24.638]	15	487576-7
	.860 [21.844]	.920 [23.368]	14	487576-6
	.810 [20.574]	.870 [22.098]	13	487576-5
	.760 [19.304]	.820 [20.828]	12	487576-4
	.710 [18.034]	.770 [19.558]	11	487576-3
	.660 [16.764]	.720 [18.288]	10	487576-2
	.610 [15.494]	.670 [17.018]		487576-1

1. FLAME RETARDANT THERMOPLASTIC; COLOR-BLACK
2. FINISH: .000150[0.00381mm] MIN THK TIN OVER .000050[0.00127mm] MIN THK NICKEL ON ENTIRE CONTACT.
3. CONNECTOR SUPPLIED IN CLOSED CONDITION.
4. #NO. OF CONTACTS NOT TO BE LOADED.
5. PRODUCT SPEC: 108-16025
6. APPLICATION SPEC: 114-16009
7. PACKAGING SPEC: 107-51005

DIMENSIONS: INCHES[mm]

TOLERANCES UNLESS OTHERWISE SPECIFIED:
0 PLC ±-
1 PLC ±-
2 PLC ±-
3 PLC ±.005 [0.127]
4 PLC ±-
ANGLES ±-

MATERIAL
HOUSING & STUFFER: 1
CONTACTS: PHOS BRONZE

FINISH
CONTACTS: 2

DWN SCOTT A. SHUEY 12SEP88
CHK J. ENGLISH 27SEP88
APVD SF LEONG
PRODUCT SPEC -
APPLICATION SPEC -
WEIGHT -

CUSTOMER DRAWING

TE Connectivity

NAME CONNECTOR ASSEMBLY, ZIF-LINE 50

SIZE	CAGE CODE	DRAWING NO
A3	00779	C-487576

SCALE 4:1 SHEET 1 OF 1 REV N3

Mouser Electronics

Authorized Distributor

Click to View Pricing, Inventory, Delivery & Lifecycle Information:

TE Connectivity:
487576-4