THIS DRAWING IS UNPUBLISHED. RELEASED FOR PUBLICATION 20
© COPYRIGHT 20 BY TYCO ELECTRONICS CORPORATION. ALL RIGHTS RESERVED.

PART NUMBER	REV	FIRST USED	POWER UNIT	FEED TYPE	DESCRIPTION
1855513-1	A	122500-1	LEADMAKER	POST FEED	CUTS CARRIER
1855513-2	A	565435-5	BENCH MODEL K	PRE FEED	CUTS CARRIER
1855513-3	A	354500-1	BENCH MODEL G	PRE FEED	CUTS CARRIER
1855513-6	A	122500-1	LEADMAKER	POST FEED	CONTINUOUS CARRIER
7-1855513-7	A	-	-	-	SPARE PARTS

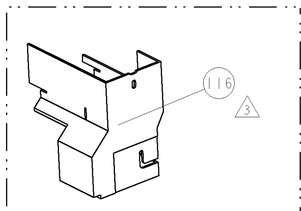

AMP-O-LECTRIC TERM GUARD

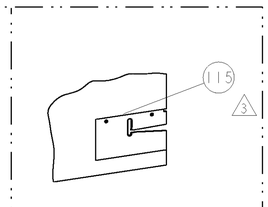

G TERMINATOR GUARD

TERMINAL NAME: FLAG DISCONNECT

TE PN	ETCO
1949981	07869 (DF310-HB)
-	-
-	-
-	-
-	-
-	-
-	-
-	-
-	-
-	-
-	-
-	-
-	-
WIRE STRIP LENGTH 4.50-4.88	TERM APPL SPEC NONE

ETCO TERMINAL - TE CRIMP SPECS

CRIMP HEIGHT	WIRE SIZE	REF SETTING
1.98mm+.05/-.05[.078+.002/-.002]	14AWG or 2mm2	B3
1.85mm+.05/-.05[.073+.002/-.002]	16AWG or 1.3mm2	C0
1.73mm+.05/-.05[.068+.002/-.002]	18AWG or 0.8mm2	C8
	-	-

CRIMP	SIZE	TYPE	RANGE
WIRE	2.79mm [.110]	F	14-18 AWG
INSUL	-	-	-

FEED	APPLICATOR INSTRUCTIONS	SET UP GAGE
17.07	408-8040	458637-1

LOC	DIST
A	66

REVISIONS

P	LTR	DESCRIPTION	DATE	DWN	APVD
	A	RELEASED	16JUL2009	LG	GB

1. RECOMMENDED SPARE PARTS
2. GREASE LIGHTLY
3. GUARD MUST BE IN PLACE WHEN OPERATING APPLICATOR IN A BENCH MACHINE
4. 18 AWG WIRE IS NOT RECOMMENDED BY TERMINAL MANUFACTURER.

*** WARNING**
ON INSTALLATION, SET WIRE DISC TO LARGEST WIRE SIZE SETTING. USE OF SETTINGS BELOW MIN. REQUIRED CRIMP HEIGHT SETTING WILL CAUSE DAMAGE TO CRIMP TOOLING.

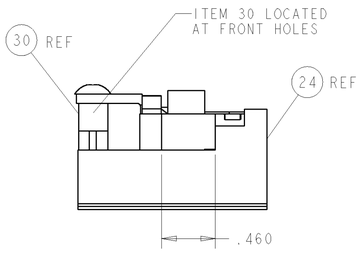

FEED TRACK POSITION GUIDE BY WIRE BARREL

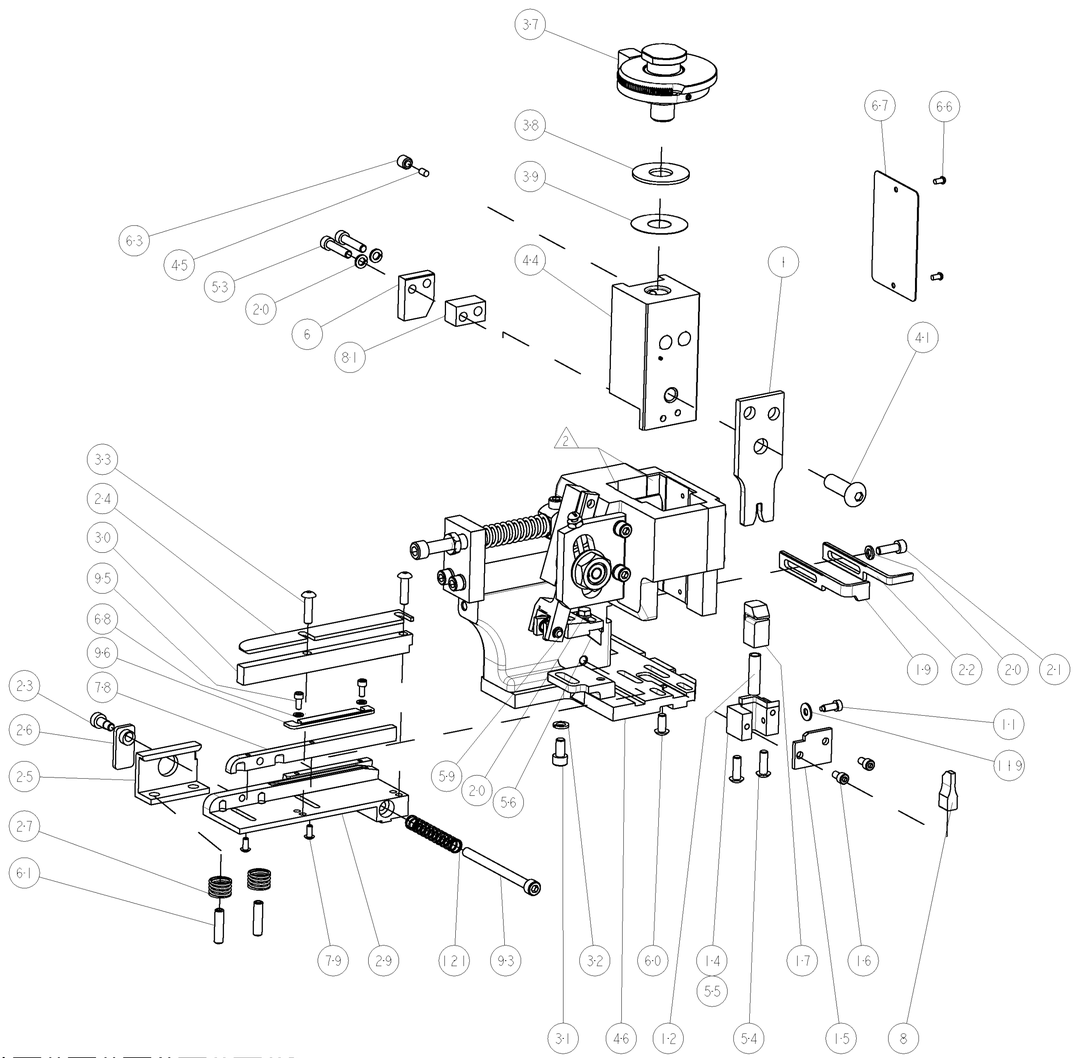

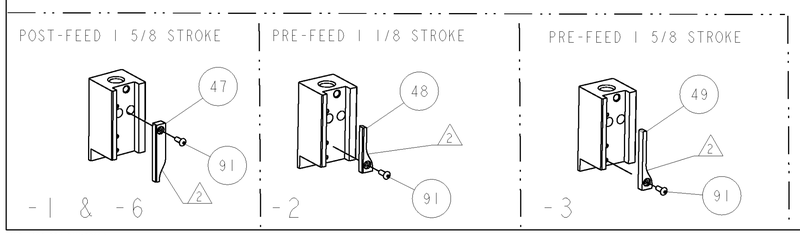

-77	-6	-3	-2	-1	U/M	PART NO	DESCRIPTION	ITEM NO
-	1	1	1	1	-	1-22281-8	SPRING, COMPRESSION	121
-	1	1	1	1	-	21055-5	WASHER, FLAT, REG NO 6	119
-	-	-	REF	-	..	455749-1	GUARD WINDOW	116
-	-	REF	-	-	..	679532-1	INSERT, GUARD	115
-	1	1	1	1	-	690438-1	FRONT STRIP GUIDE	96
-	2	2	2	2	-	1-21000-3	SCR, SKT HD CAP 4-40 X .250	95
-	1	1	1	1	-	8-21000-7	SCR, SKT HD CAP 10-32 X 2.500	93
-	1	1	1	1	-	1-21002-7	SCR, BTN SKT HD CAP 6-32 X .375	91
-	1	1	1	1	-	6-240641-1	SPACER	81
-	2	2	2	2	-	1-21002-3	SCR, BTN SKT HD CAP 4-40 X .250	79
-	1	1	1	1	-	1-189807-5	FENCE	78
-	1	1	1	1	-	4088040	SF APPL INST 408-8040	72
-	1	1	1	1	-	217238-1	GENERAL INSTRUCTION PKG	71
-	2	2	2	2	-	21024-2	WASHER, SPRG LOCK, REG NO 4	68
-	1	1	1	1	-	461264-5	PLATE, IDENTIFICATION	67
-	2	2	2	2	-	21017-2	SCREW, DRIVE	66
-	1	1	1	1	-	21009-2	SCR, SET, SELF LOCKING 1/4-20 X .250	63
-	2	2	2	2	-	5-21006-6	SCR, SET, CUP POINT 10-32 X .750	61
-	1	1	1	1	-	22733-8	SCR, BHSC, SELF-LOCKING, 8-32 X .375	60
-	1	1	1	1	-	2-22603-0	SCREW, MACH, HEX HD, 8-32 x .312	59
-	1	1	1	1	-	694433-7	FEED PAWL	56
-	1	-	-	-	-	681023-4	SHEAR HOLDER, REAR	55
-	2	2	2	2	-	2-21002-2	SCR, BTN SKT HD CAP 8-32 X .500	54
-	2	2	2	2	-	2-21000-9	SCR, SKT HD CAP 8-32 X .750	53
-	-	1	-	-	..	690602-6	CAM, PRE FEED, 1 5/8	49
-	-	-	1	-	..	690602-5	CAM, PRE FEED, 1 1/8	48
-	1	-	-	1	-	690501-4	CAM, POST-FEED 1 5/8	47
-	1	1	1	1	-	459456-1	APPL. BASIC SUB ASSY (SIDE WISE MQCA)	46
-	1	1	1	1	-	690191-1	PLUG,NYLON	45
-	1	1	1	1	-	1-455673-4	RAM, SIDE FEED	44
-	1	1	1	1	-	7-21002-9	SCR, BTN SKT HD CAP 5/16-24 X 1.00	41
-	1	1	1	1	-	690125-1	SHIM SUB-ASSY	39
-	1	1	1	1	-	1-469367-4	SHIM	38
-	1	1	1	1	-	879103-4	FINE ADJUST HEAD ASSEMBLY	37
-	2	2	2	2	-	2-21002-3	SCR, BTN SKT HD CAP 8-32 X .625	33
-	1	1	1	1	-	21024-5	WASHER, SPRG LOCK, REG NO 10	32
-	1	1	1	1	-	3-21000-4	SCR, SKT HD CAP 10-32 X .375	31
-	1	1	1	1	-	1-1320908-6	SPACER, STRIP GUIDE	30
-	1	1	1	1	-	1633629-3	PLATE, REAR STRIP GUIDE	29
-	2	2	2	2	-	1-22284-0	SPRING, COMPRESSION	27
-	1	1	1	1	-	356835-1	LEVER, DRAG RELEASE	26
-	1	1	1	1	-	240792-1	DRAG, TERMINAL	25
-	1	1	1	1	-	1633630-2	PLATE, STRIP GUIDE	24
-	1	1	1	1	-	21989-8	SCR, SKT HD SHLDR 3/16 DIA X .250	23
-	1	-	-	1	-	690472-2	STRIPPER	22
-	1	1	1	1	-	2-21000-7	SCR, SKT HD CAP 8-32 X .500	21
-	4	4	4	4	-	21024-4	WASHER, SPRG LOCK, REG NO 8	20
-	-	1	1	-	-	691353-1	STRIPPER	19
-	1	1	1	1	-	2-690463-1	FLOATING SHEAR, REAR	17
-	2	2	2	2	-	1-21000-8	SCR, SKT HD CAP 6-32 X .250	16
-	1	1	1	1	-	690464-2	SHEAR PLATE, REAR	15
-	-	1	1	1	-	1-690462-8	SHEAR HOLDER, REAR	14
-	1	-	-	-	..	-	-	13
-	1	1	1	1	-	3-22280-3	SPRING, COMPRESSION	12
-	1	1	1	1	-	690461-1	STOP, SHEAR	11
-	-	-	-	-	..	-	-	10
-	-	-	-	-	..	-	-	9
1	1	1	1	1	-	3-1633665-4	ANVIL, COMBINATION	8
-	-	-	-	-	..	-	-	7
-	1	1	1	1	-	690468-1	DEPRESSOR SHEAR, REAR	6
-	-	-	-	-	..	-	-	5
-	-	-	-	-	..	-	-	4
-	-	-	-	-	..	-	-	3
-	-	-	-	-	..	-	-	2
1	1	1	1	1	-	2-456408-1	CRIMPER, WIRE PREMIUM	1

THIS DRAWING IS A CONTROLLED DOCUMENT FOR TYCO ELECTRONICS CORPORATION. IT IS SUBJECT TO CHANGE AND ANY USER OF THIS DRAWING OR INFORMATION SHOULD BE CONTACTED FOR THE LATEST REVISION.

DIMENSIONS: INCHES

TOLERANCES UNLESS OTHERWISE SPECIFIED:
0 PLC ±-
1 PLC ±0.1
2 PLC ±0.01
3 PLC ±0.001
4 PLC ±0.0001
ANGLES ±-

MATERIAL - -
FINISH - -

DWN L GROSS	27MAY2009	
CHK G BAILEY	27MAY2009	
APVD N DEMING	27MAY2009	
PRODUCT SPEC -		
APPLICATION SPEC -		
WEIGHT -		

Tyco Electronics
Tyco Electronics
Harrisburg, PA 17105-3608

NAME FINE ADJUST SIDE FEED HDM APPLICATOR -

SIZE	CAGE CODE	DRAWING NO	RESTRICTED TO
A1	00779	C-1855513	-

CUSTOMER DRAWING SCALE 3:5 SHEET 1 OF 1 REV A

CUSTOMER VIEWABLE ASSEMBLY

Mouser Electronics

Authorized Distributor

Click to View Pricing, Inventory, Delivery & Lifecycle Information:

TE Connectivity:

1855513-3