THIS DRAWING IS UNPUBLISHED. RELEASED FOR PUBLICATION 2006
© COPYRIGHT 2006 BY - ALL RIGHTS RESERVED.

REVISIONS

P	LTR	DESCRIPTION	DATE	DWN	APVD
	A3	ECR-10-008205	29APR2010	VG	AR
	A4	ECR-16-009320	13DEC2016	GCM	MKO

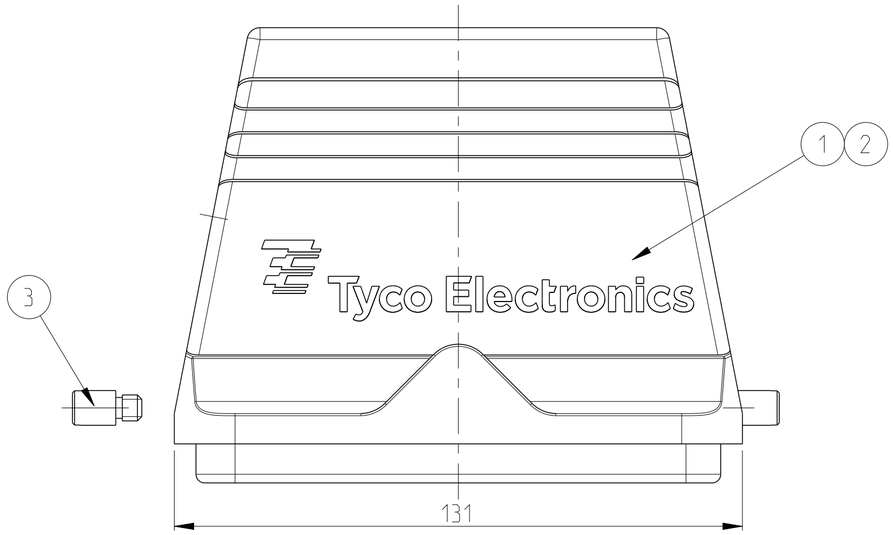

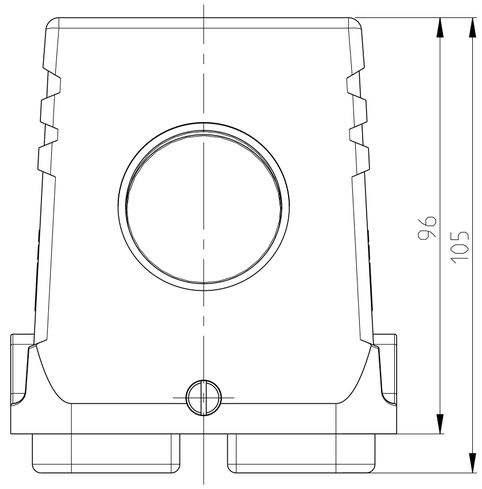

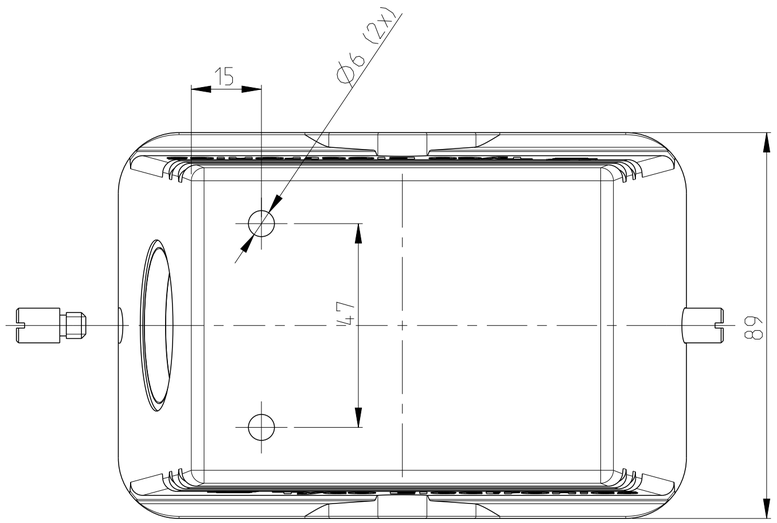

PN 0-1 AS SHOWN

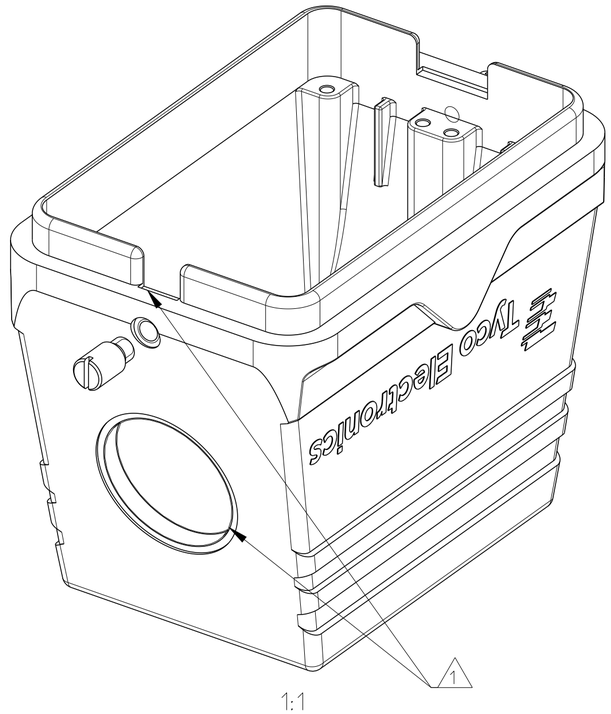

1:1

NOTES

1 PART SHALL BE FREE AND CLEAN OF BURRS AND OTHER FOREIGN MATERIAL

2 PACKAGING: QUANTITY 3 PIECES

3 VARNISHING INSIDE HOUSING NOT REQUIRED

OBSOLETE

2	2	CLIP BOLT	V2A	-	BLANK	3	-
1	-	HOOD HB.48	ALUMINIUM/ALU	ALUMINIUM OXID	BLACK	2	PG OF SITE WITH LARGELY CODIER NUT
-	1	HOOD HB.48	ALUMINIUM/ALU	ALUMINIUM OXID	-	1	PG OF SITE WITH THE SMALL CODIER NUT 1
0-2	0-1	DESCRIPTION	MATERIAL	SURFACE	COLOR	ITEM	NOTES
	HB-K.48.STS-GR.1.36.G+2.D=6-Code						
~~HB-K.48.STS-GR.1.36.G+2.D=6~~							

THIS DRAWING IS A CONTROLLED DOCUMENT.

DIMENSIONS: mm

TOLERANCES UNLESS OTHERWISE SPECIFIED:
0 PLC ±-
1 PLC ±-
2 PLC ±-
3 PLC ±-
4 PLC ±-
ANGLES ±1°

MATERIAL -

FINISH -

DWN R.SCHNEIDER 07AUG2007
CHK SCHNURPFEIL 07AUG2007
APVD - -
PRODUCT SPEC -
APPLICATION SPEC -
WEIGHT -

TE Connectivity

NAME
HOOD HB.48
-
HB-K.48.STS-GR.1.36.G

SIZE	CAGE CODE	DRAWING NO	RESTRICTED TO
A2	00779	C-1102072	-

CUSTOMER DRAWING | SCALE 1:1 | SHEET 1 OF 1 | REV A4

Mouser Electronics

Authorized Distributor

Click to View Pricing, Inventory, Delivery & Lifecycle Information:

TE Connectivity:

1102072-2