THIS DRAWING IS UNPUBLISHED. RELEASED FOR PUBLICATION - , - .
© COPYRIGHT - BY TYCO ELECTRONICS CORPORATION. ALL RIGHTS RESERVED.

PART NUMBER	REV	FIRST USED
1852524 - 1	A	122500 - 1
1852524 - 2	A	565435 - 5
1852524 - 3	A	354500 - 1
7 - 1852524 - 7	A	SPARE PARTS KIT

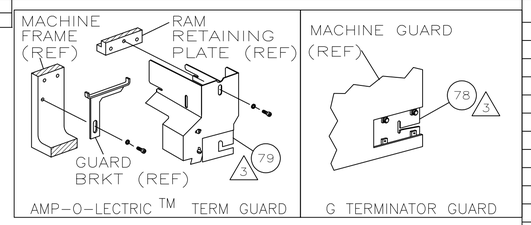

TERMINAL NAME: MAG-MATE™ TERMINAL

1742614

CRIMPING DATA

PAD LTR	CRIMP HEIGHT	WIRE SIZE
A	.040 ±.002 [1.02 ±0.05mm]	20
B	.037 ±.002 [0.94 ±0.05mm]	22
C	.034 ±.002 [0.86 ±0.05mm]	24
D	NOT	USED

CRIMP	SIZE	TYPE	RANGE
WIRE	.070 [1.78mm]	F	24-20
INSUL	-	-	-

WIRE STRIP LENGTH	TERM APPL SPEC	FEED	APPL INSTRUCTION	SET UP GAGE	LAYOUT
.141-.172	114-2046	.330	408-8040	458637-1	1230

LOC	DIST
A	66

REVISIONS

P	LTR	DESCRIPTION	DATE	DWN	APVD
	A	RELEASED	-	-	-

-1	LEADMAKER	AIRFEED	
-2	BENCH MODEL K	AIRFEED	
-3	BENCH MODEL G	AIRFEED	

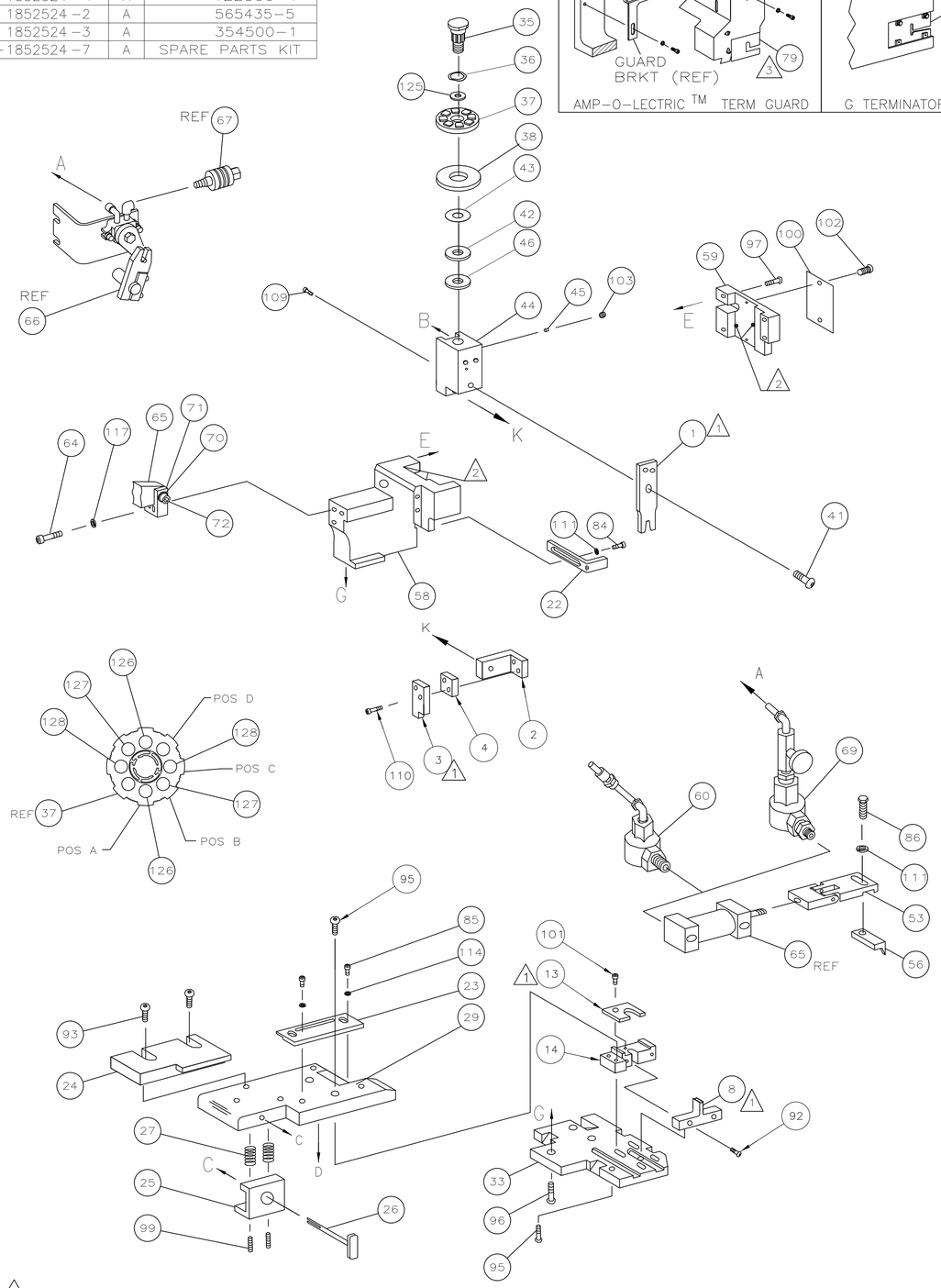

-77	-3	-2	-1	U/M	PART NO	DESCRIPTION	ITEM NO
							129
-	2	2	2	-	5-354779-4	PIN, WIRE DISC (.3260)C	128
-	2	2	2	-	4-354779-6	PIN, WIRE DISC (.3220)B	127
-	2	2	2	-	3-354779-9	PIN, WIRE DISC (.3185)A	126
-	1	1	1	-	986950-1	WASHER, FLAT PRECISION	125
-	1	1	1	-	217238-1	GENERAL INSTRUCTION PACKAGE	124
-	1	1	1	-	4088040	SF APPL INST 408-8040	123
							122
							121
							120
							119
							118
-	2	2	2	-	21024-5	WASHER, LOCK(#10)FEED	117
							116
							115
-	2	2	2	-	21024-4	WASHER,LOCK(#8)FRONT STP GUIDE	114
							113
							112
-	2	2	2	-	21024-4	WASHER,LOCK(#8)STRIPPER	111
-	2	2	2	-	2-21000-2	SCR,SHC(6-32x.75)REAR SHEAR PL	110
-	2	2	2	-	2-21000-1	SCR,SHC(6-32x.62)DEPRESSOR	109
							108
							107
							106
							105
							104
-	1	1	1	-	21009-2	SCR,SKT SET(1/4-20x.25 LW)RAM	103
-	2	2	2	-	21017-2	SCR,DRIVE(#2x.19)ID PLATE	102
-	1	1	1	-	3-21000-4	SCR, SHC(10-32x.38)SHEAR PLATE	101
-	1	1	1	-	461264-1	PLATE, IDENTIFICATION	100
-	2	2	2	-	5-21006-6	SCR,SET(10-32x.75)DRAG	99
							98
-	4	4	4	-	2-21002-9	SCR,BHC(10-32x.75)CAP	97
-	3	3	3	-	2-22733-8	SCR,BHC(1/4-20x.62)HSG	96
-	5	5	5	-	2-21002-6	SCR,BHC(10-32x.38)SHEAR BLK	95
							94
-	2	2	2	-	2-21002-1	SCR,BHC(8-32x.38)R STP GDE	93
-	2	2	2	-	22733-8	SCR,BHC(8-32x.38)(LOC-WEL)ANVIL	92
							91
							90
							89
							88
							87
-	1	1	1	-	2-22603-1	SCR,HEX HD(8-32x.38)FEED FINGER	86
-	2	2	2	-	2-21000-6	SCR,SHC(8-32x.38)F ST GUIDE	85
-	1	1	1	-	2-21000-7	SCR,SHC(8-32x.50)STRIPPER	84
							83
							82
							81
							80
-	-	1	-	-	462992-7	GUARD ASSY	79
-	REF	-	-	-	679532-1	INSERT, GUARD	78
							77
							76
							75
							74
							73
-	1	1	1	-	3-21001-5	SCR,SHC(3/8-16x.75)	72
-	1	1	1	-	459610-9	MOUNT, FEED BRACKET	71

QTY REQD PER ASSY — PARTS LIST

-77	-3	-2	-1	U/M	PART NO	DESCRIPTION	ITEM NO
-	1	1	1	-	21024-8	WASHER. LOCK	70
-	-	1	-	-	692655-5	AIR FEED VALVE ASSY	69
							68
-	-	REF	-	-	24042-2	VALVE, SHUT OFF	67
-	-	REF	-	-	692655-6	AIR FEED VALVE ASSY	66
-	1	1	1	-	461065-1	AIR FEED ASSY (1 INCH)	65
-	2	2	2	-	3-21000-9	SCR,SHC(10-32x.75)AIR ASSY	64
							63
							62
							61
-	1	-	1	-	692655-7	AIR FEED VALVE ASSY	60
-	1	1	1	-	454220-1	CAP, RAM	59
-	1	1	1	-	454485-1	HOUSING	58
							57
-	1	1	1	-	1-694433-3	PAWL, FEED	56
							55
							54
-	1	1	1	-	461062-1	FEED FINGER ASSY	53
							52
							51
							50
							49
							48
							47
-	1	1	1	-	690124-1	WASHER, RAM	46
-	1	1	1	-	690191-1	PLUG, NYLON	45
-	1	1	1	-	808965-1	RAM	44
-	1	1	1	-	690125-1	WASHER, LAMINATED	43
-	1	1	1	-	690124-5	WASHER, RAM	42
-	1	1	1	-	7-21002-7	BOLT, CRIMPER(5/24x.75)	41
							40
							39
-	1	1	1	-	690223-2	SPACER, INSULATION DISC	38
-	1	1	1	-	354777-1	WIRE DISC, PLASTIC	37
-	1	1	1	-	22480-5	WASHER, SPRING	36
-	1	1	1	-	690212-1	POST, RAM	35
							34
-	1	1	1	-	809010-1	PLATE, BASE	33
							32
							31
							30
-	1	1	1	-	809032-1	PLATE, STRIP GUIDE	29
							28
-	2	2	2	-	22284-9	SPRING, DRAG	27
-	1	1	1	-	454175-1	LEVER, DRAG RELEASE	26
-	1	1	1	-	1-690754-6	DRAG, TERMINAL	25
-	1	1	1	-	809030-1	GUIDE, STRIP (REAR)	24
-	1	1	1	-	809033-1	GUIDE, STRIP (FRONT)	23
-	-	-	1	-	1-690472-3	STRIPPER	22
							21
							20
							19
							18
							17
							16
							15
-	1	1	1	-	1213090-1	BLOCK, BASE	14
-	1	1	1	-	809036-2	PLATE, SHEAR, LEFT	13
							12
							11
							10
							9
1	1	1	1	-	1213091-1	ANVIL	8
							7
							6
							5
-	1	1	1	-	809028-1	SPACER, SHEAR	4
-	1	1	1	-	809034-1	BLADE, SHEAR	3
-	1	1	1	-	809029-1	BLOCK, SHEAR	2
1	1	1	1	-	1-456404-6	CRIMPER, WIRE	1

QTY REQD PER ASSY — PARTS LIST

1. RECOMMENDED SPARE PARTS.
2. GREASE LIGHTLY.
3. GUARD MUST BE IN PLACE WHEN OPERATING APPLICATOR IN A BENCH MACHINE.
4. SEE DRAWING FOR COMPONENTS

THIS DRAWING IS A CONTROLLED DOCUMENT.

DWN M.YOUNGER 26SEP2007
CHK T.MIDDLETON 26SEP2007
APVD T.FLRIN 26SEP2007

Tyco Electronics
Tyco Electronics Corporation
Harrisburg, PA 17105-3608

DIMENSIONS: INCHES
TOLERANCES UNLESS OTHERWISE SPECIFIED:
0 PLC ± -
1 PLC ± -
2 PLC ± .25
3 PLC ± -
4 PLC ± -
ANGLES ± -

MATERIAL -
FINISH -

PRODUCT SPEC -
APPLICATION SPEC -
WEIGHT -

NAME SIDE FEED HDM APPLICATOR
-
-

SIZE	CAGE CODE	DRAWING NO	RESTRICTED TO
A1	00779	C-1852524	-

CUSTOMER DRAWING — SCALE - — SHEET 1 OF 1 — REV A

Mouser Electronics

Authorized Distributor

Click to View Pricing, Inventory, Delivery & Lifecycle Information:

TE Connectivity:

1852524-1