REVISIONS			
REV	DESCRIPTION	DATE	APPROVED
01_1	SEE ECN 80-0823-2	FN 8/12/80	RG 8/12/80
01_2	ECN 92-0010	9/23/92	10/1/92

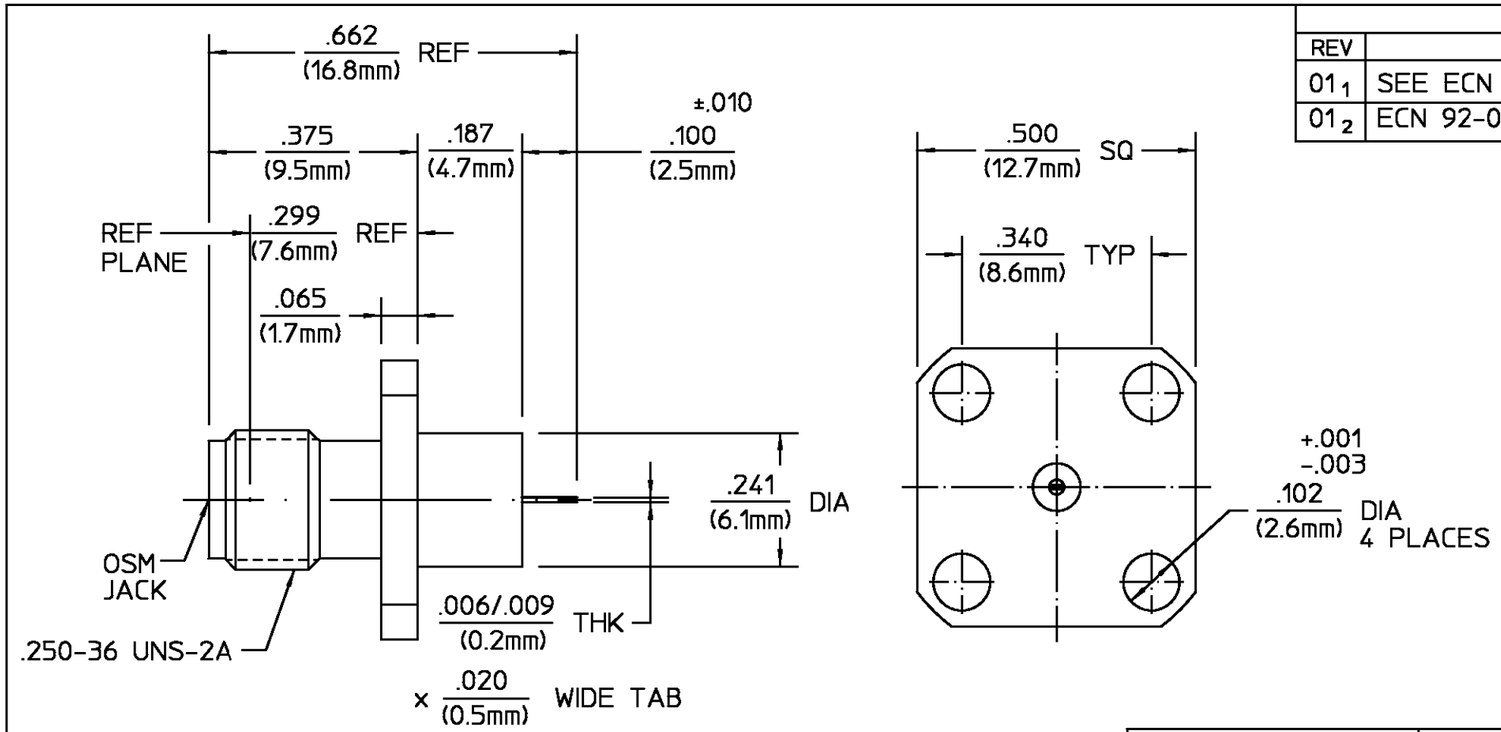

ELECTRICAL	MECHANICAL	ENVIRONMENTAL
Nominal Impedance (Ohms) 50	Interface Dimensions MIL-STD-348A, Fig. 310.2	Temperature Rating -55°C to +105°C
Frequency Range (GHz) DC to 18	Recommended Mating Torque N/A	Vibration MIL-STD-202, Method 204, Condition D.
Volt Rating (VRMS MAX) @ Sea Level 190	Mating Characteristics: Insertion (MAX Lbs) 3.0	Shock MIL-STD-202, Method 213, Condition I.
VSWR 1.05 ± .005 f (GHz)	Withdrawal (MIN Oz) 1.0	Thermal Shock MIL-STD-202, Method 107, Condition A
Insertion Loss (dB MAX) $.03\sqrt{f(GHz)}$	Force to Engage and Disengage (In-Lbs MAX) 2.0	Moisture Resistance MIL-STD-202, Method 106
RF Leakage (dB MIN) -[60 - f(GHz)]	Center Contact Captivation Axial (Lbs) 6.0	Corrosion - MIL-STD-202, Method 101, Condition B, 5% salt spray
Corona, 70,000 Ft (VRMS MIN) 250	Radial (In-Oz) 4.0	
Dielectric Withstanding Voltage (VRMS MIN) @ Sea Level 1,000	Cable Retention Axial Force (Lbs) N/A	
Contact Resistance (Milliohms MAX) Center Contact 2.0	Torque (In-Oz) N/A	
Outer Contact 2.0	Weight (Grams) TBD	
Cable to Housing N/A		
RF High Potential @ Sea Level (VRMS MIN @ 5 MHz) 670		
I.R.(Megohms MIN) 10,000		

COMPONENT	MATERIAL	FINISH
HOUSING	STAINLESS STEEL PER ASTM-A484 AND ASTM-A582, TYPE 303	GOLD PLATE PER MIL-G-45204 OVER NICKEL PLATE PER QQ-N-290
DIELECTRIC	TFE FLUOROCARBON PER ASTM-D-1457	N/A
CENTER CONTACT	BERYLLIUM COPPER PER ASTM B 196, ALLOY C17300, CONDITION H	GOLD PLATE PER MIL-G-45204 OVER COPPER PLATE PER MIL-C-14550

UNLESS OTHERWISE SPECIFIED DIMENSIONS ARE IN INCHES TOLERANCE ON FRAC. ± 1/64 DEC. ±.005 ANGLES ± 1°

		DATE
DRAWN BY	E. J. C	7/30/68
CHECKED BY	RW	7/30/68
APP'D BY	ED/VS	7/30/68

AMP

AMP Incorporated
140 Fourth Avenue
Waltham, MA 02451-7599

These drawings and specifications are the property of Omni Spectra Incorporated and shall not be reproduced or copied or used in whole or in part as the basis for the manufacture or sale of item(s) without written permission.

USE ASS'Y PROCEDURE

NO. A.P. N/A

TITLE OSM FLANGE MOUNT JACK RECEPTACLE TAB TERMINAL

SIZE	CODE IDENT NO.		REV
B	26805	2052-1133-00	01_2

SCALE 10 : 1 SHEET 1 OF 1

CUSTOMER DRAWING

AMP PART # 1052514-1
SHEET 1 OF 1 REV A

Mouser Electronics

Authorized Distributor

Click to View Pricing, Inventory, Delivery & Lifecycle Information:

TE Connectivity:

2052-1133-00