THIS DRAWING IS UNPUBLISHED.
DIFFUSION RESTREINTE
© COPYRIGHT

RELEASED FOR PUBLICATION
LIBRE A LA DIFFUSION
ALL RIGHTS RESERVED.
TOUS DROITS RESERVES

FILS ADMISSIBLES (ACCEPTABLES WIRES)	
JAUGE (AWG) SECTION / 7 BRINS (7 STRANDS)	24 0.22mm^2
ISOLANT: ØMAX / MATIERE (INSUL.: Ø MAX / MAT'L)	Ø1.2 / PVC

LOC	DIST
F	7

REVISIONS

P	LTR	DESCRIPTION MODIFICATIONS	DATE	DWN DESS.	APVD APP.
	E1	REVISED PER ECO-11-005150	19APR11	RK	HMR

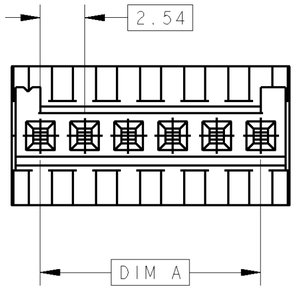

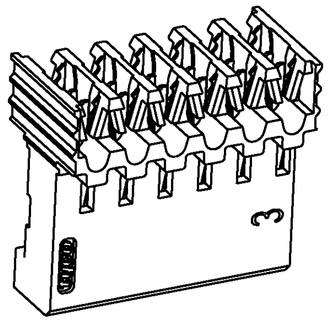

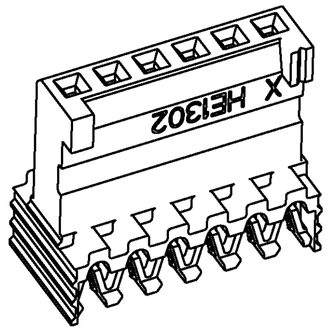

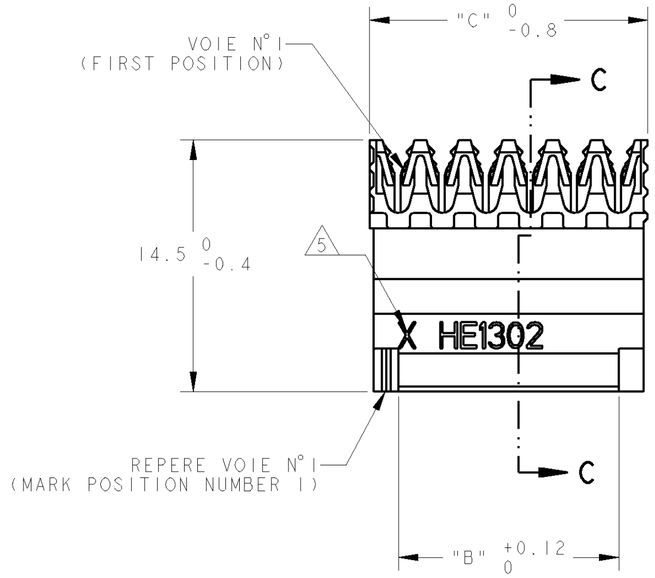

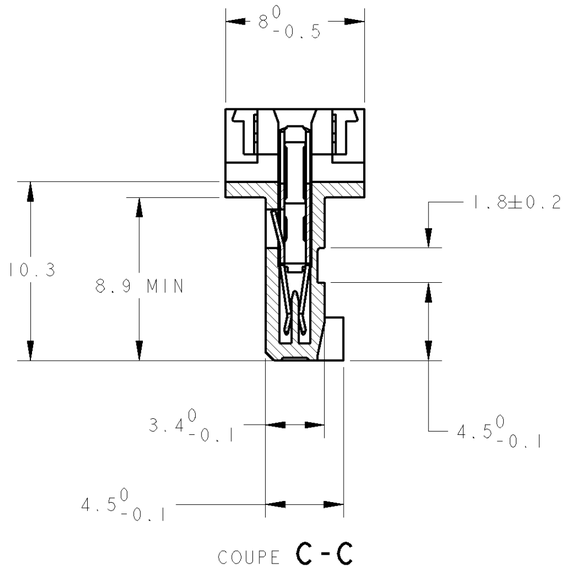

OBSOLETE	~~3~~	~~64.38~~	~~60.96~~	~~25~~	~~2-281709-5~~	~~2-144273-5~~
OBSOLETE	~~3~~	~~61.76~~	~~58.42~~	~~24~~	~~2-281709-4~~	~~2-144273-4~~
OBSOLETE	~~10~~	~~59.22~~	~~55.88~~	~~23~~	~~2-281709-3~~	~~2-144273-3~~
OBSOLETE	~~10~~	~~56.68~~	~~53.34~~	~~22~~	~~2-281709-2~~	~~2-144273-2~~
OBSOLETE	~~10~~	~~54.14~~	~~50.80~~	~~21~~	~~2-281709-1~~	~~2-144273-1~~
OBSOLETE	~~11~~	~~51.60~~	~~48.26~~	~~20~~	~~2-281709-0~~	~~2-144273-0~~
OBSOLETE	~~12~~	~~49.06~~	~~45.72~~	~~19~~	~~1-281709-9~~	~~1-144273-9~~
	12	46.52	43.18	18	1-281709-8 *	1-144273-8 *
OBSOLETE	~~13~~	~~43.98~~	~~40.64~~	~~17~~	~~1-281709-7~~	~~1-144273-7~~
OBSOLETE	~~14~~	~~41.44~~	~~38.10~~	~~16~~	~~1-281709-6~~	~~1-144273-6~~
	15	38.90	35.56	15	1-281709-5 *	1-144273-5 *
OBSOLETE	~~16~~	~~36.36~~	~~33.02~~	~~14~~	~~1-281709-4~~	~~1-144273-4~~
OBSOLETE	~~17~~	~~33.82~~	~~30.48~~	~~13~~	~~1-281709-3~~	~~1-144273-3~~
	18	31.28	27.94	12	1-281709-2 *	1-144273-2 *
OBSOLETE	~~20~~	~~28.74~~	~~25.40~~	~~11~~	~~1-281709-1~~	~~1-144273-1~~
	20	26.20	22.86	10	1-281709-0 *	1-144273-0 *
OBSOLETE	~~25~~	~~23.66~~	~~20.32~~	~~9~~	~~0-281709-9~~	~~0-144273-9~~
	25	21.12	17.78	8	0-281709-8 *	0-144273-8 *
	30	18.58	15.24	7	0-281709-7	0-144273-7
	35	16.04	12.70	6	0-281709-6 *	0-144273-6 *
	40	13.50	10.16	5	0-281709-5 *	0-144273-5 *
	50	10.96	7.62	4	0-281709-4 *	0-144273-4 *
	70	8.42	5.08	3	0-281709-3 *	0-144273-3 *
	100	5.88	2.54	2	0-281709-2	0-144273-2
QUANT/ TUBE		C	A,B	Nb DE POS	4	VRAC (L.P.)
		DIMENSIONS			REFERENCES (PART No)	

1 CES CONNECTEURS SONT PREVUS POUR ETRE ACCOUPLES AVEC LES EMBASES 'HE1302' SIMPLE RANGEE
(THESE CONNECTORS ARE DESIGNED TO BE MATED WITH 'HE1302' HEADERS SINGLE ROW)
-

2 LES REFERENCES SUIVIES D'UN ' * ' SONT LES VERSIONS NORMALISEES SELON LA 'CEI 603-8'
(THE PART-No FOLLOWED BY ' * ' ARE COVERED BY THE INTERNATIONAL STANDARD 'IEC 603-8')

3 REVETEMENT DES CONTACTS: 0.4µm OR DANS LA ZONE DE CONTACT, ETAIN SUR SORTIE CAD, SOUS-COUCHE NICKEL
(CONTACTS PLATING: 0.4µm GOLD ON CONTACT AREA, TIN ON I.D. BARREL AREA NICKEL UNDER-PLATING)

4 CONNECTEURS CONDITIONNES SOUS TUBE PVC
(THESE CONNECTORS ARE PACKAGED IN TUBE)

5 ' X ' EST REMPLACE PAR LE DEUXIEME CHIFFRE DES JAUGES AWG
(' X ' REPLACED BY THE SECOND DIGIT OF AWG AS DEFINED IN TABLE)

6 MATERIAUX - BOITIER: PBT UL 94V0
- CONTACTS: BRONZE PHOSPHOREUX
(MATERIALS - CASE: PBT UL 94V0
- CONTACTS: PHOSPHOR BRONZE)

DIMENSIONS: mm

MATERIAL/MATIERE 6

TOLERANCES UNLESS OTHERWISE SPECIFIED:
TOLERANCES NON SPECIFIEES (SUIV NB DE DECIMALES)
0 PLC/DEC: ±
1 PLC/DEC: ±0.3
2 PLC/DEC: ±
3 PLC/DEC: ±
4 PLC/DEC: ±
ANGLES ±5°
FINISH/FINITION 3

DWN/DESSINE 17NOV2000 C. COMBEDOUZON
CHK/VERIFIE 17NOV2000 T. CORRIOU
APVD/APROUVE 17NOV2000 Y. PETRONIN
PRODUCT SPEC SPEC. PRODUIT 108-15053
APPLICATION SPEC SPEC. APPLICATION 114-15030
WEIGHT MASSE APPROX. -

TE Connectivity

NAME TITRE: HE1302 PLUG, 90deg IDC SINGLE ROW
-

SIZE FORMAT A2 | CAGE CODE 00779 | DRAWING NO No PLAN C-281709 | RESTRICTED TO RESERVE A -

CUSTOMER DRAWING /PLAN CLIENT UNIQUEMENT POUR REFERENCE | SCALE ECHELLE 4:1 | SHEET FEUILLE 1 OF DE 1 | REV E1

Mouser Electronics

Authorized Distributor

Click to View Pricing, Inventory, Delivery & Lifecycle Information:

TE Connectivity:

144273-5