THIS DRAWING IS UNPUBLISHED. RELEASED FOR PUBLICATION
© COPYRIGHT 2018 BY - TE CONNECTIVITY ALL RIGHTS RESERVED.

REVISIONS

P	LTR	DESCRIPTION	DATE	DWN	APVD
	CF	REV PER ECO-17-010490	19JUL2017	RGV	WTW
	CG	REV PER ECO-17-014327	030CT2017	JMS	WW
	CH	REVISED PER ECO-18-002641	22FEB2018	JMS	WW
	CJ	REVISED PER ECO-18-013531	30AUG2018	JMS	WW

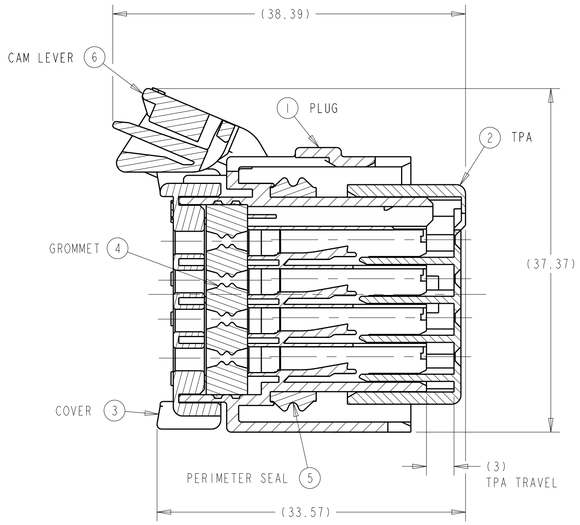

SECTION A-A
SHOWN WITH CAM LEVER
AND TPA IN THEIR
PRE-LOADED POSITIONS
(DELIVERY CONDITION)

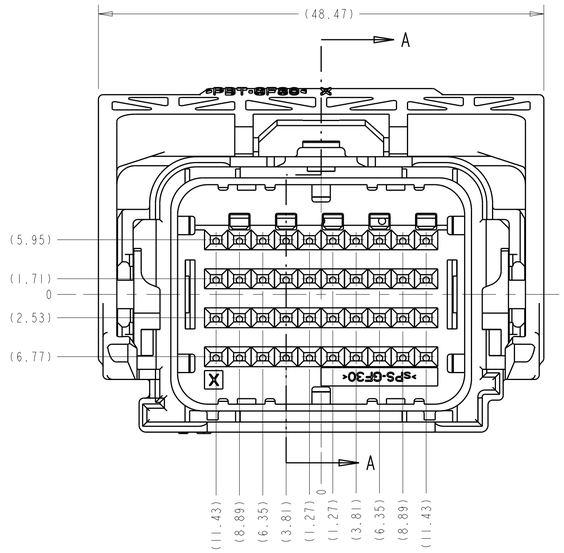

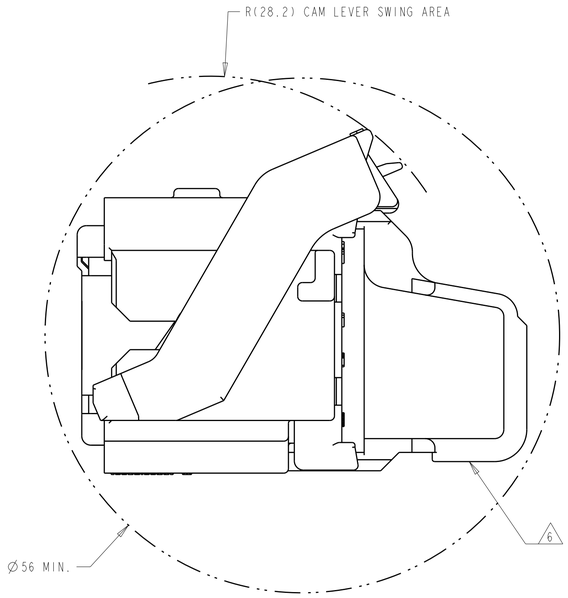

MINIMUM FEED THROUGH CONDITION
WITH 1mm CLEARANCE ALL AROUND
SHOWN WITH OPTION WIRESHIELD
TPA IS IN IT'S LOADED POSITION
CAM LEVER IS IN IT'S PRE-LOADED POSITION

KEYING OPTIONS
SCALE 2:1

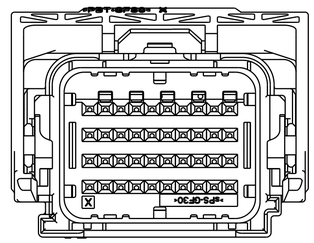

OPTION "G"

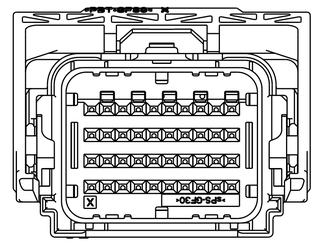

OPTION "H"

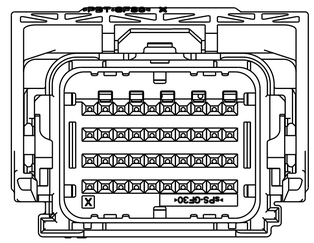

OPTION "J"

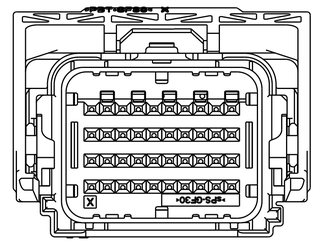

OPTION "K"

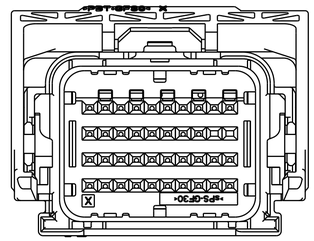

OPTION "L"

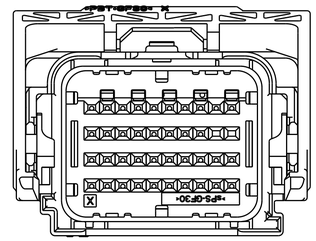

OPTION "M"

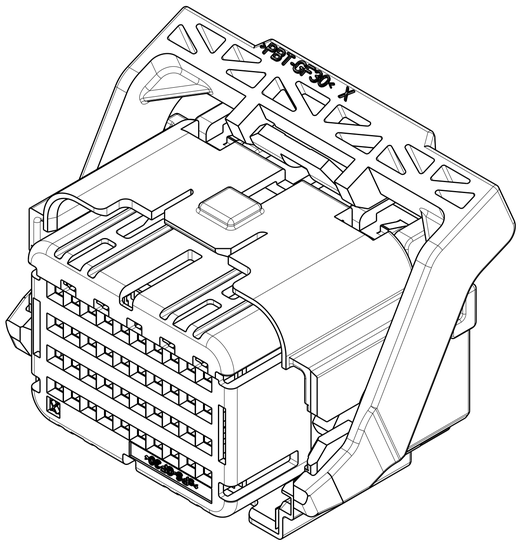

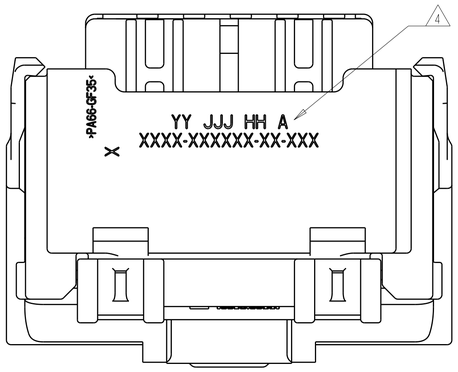

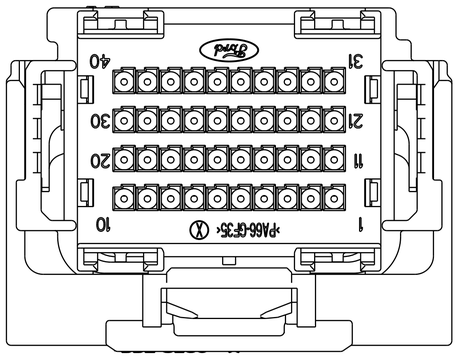

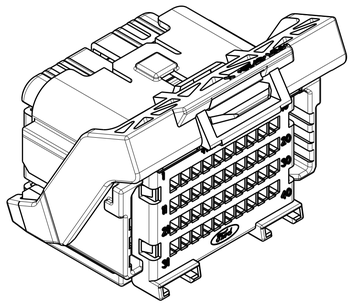

SCALE 2:1

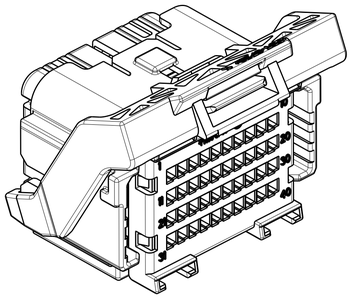

THIS VIEW SHOWS THE
OPTIONAL CAM LEVER

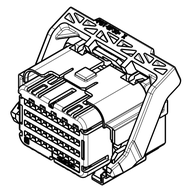

SCALE 1:1

1. APPLICABLE TERMINAL PART NUMBERS (SOLD SEPARATELY):
   FOR TIN APPLICATIONS: 1393367 AND 1393366.
   FOR GOLD APPLICATIONS: 1393365 AND 1393364.
   FOR TERMINATION AND REELING OPTIONS
   SEE DRAWINGS 1393367, 1393366, 1393365, AND 1393364.

2. COMPATIBLE WIRE SIZES FOR MAT SEAL DESIGN 1.19 TO 2.06 O.D.
   (22-18 AWG, 0.35-0.75 mm2)

3. TPA AND CAM LEVER ARE SHIPPED IN THEIR PRE-LOADED POSITION.
   ALL ASSEMBLIES ARE TO BE TRAY PACKAGED.

4. CUSTOMER PART NUMBER AND TRACEABILITY CODE (YY = TWO DIGIT YEAR,
   JJJ = JULIAN DAY, HH = TWO DIGIT MILITARY HOUR, A = ASSEMBLY PROCESS
   USED) ARE PRINTED IN THIS LOCATION.

5. PART ASSEMBLY WEIGHT WITHOUT TERMINALS AND WITH STANDARD PIN-OUT
   CONFIGURATION IS 24.71 GRAMS.

6. OPTIONAL WIRESHIELD P/N 8-1419157-8 (SOLD SEPARATELY). PLEASE CONTACT
   YOUR TE SALES REPRESENTATIVE FOR AVAILABILITY AND PRICING.

KEYING OPTION "G" SHOWN
SEE SHEET 2 FOR BILL OF
MATERIAL AND PIN-OUT CHARTS

THIS DRAWING IS A CONTROLLED DOCUMENT.

DIMENSIONS: mm

TOLERANCES UNLESS OTHERWISE SPECIFIED:
0 PLC ±-
1 PLC ±0.3
2 PLC ±0.10
3 PLC ±-
4 PLC ±-
ANGLES ±1°

MATERIAL: SEE CHART ON SHEET 2
FINISH: - / -

DWN M. FORISKA 19APR2002
CHK M. FORISKA 19APR2002
APVD A. VALASEK 19APR2002
PRODUCT SPEC -
APPLICATION SPEC -
WEIGHT SEE NOTE 5

TE Connectivity

NAME: 40 WAY ARM, PLUG ASSEMBLY WITHOUT SHORTING BARS, CUSTOMER SPEC.

SIZE A1 | CAGE CODE 00779 | DRAWING NO C-8-1419157-7 | RESTRICTED TO

CUSTOMER DRAWING | SCALE 3:1 | SHEET 1 OF 5 | REV CJ

4805 (3/13)

THIS DRAWING IS UNPUBLISHED. RELEASED FOR PUBLICATION
© COPYRIGHT 2018 BY - TE CONNECTIVITY ALL RIGHTS RESERVED.

REVISIONS

P	LTR	DESCRIPTION	DATE	DWN	APVD
	-	SEE SHEET 1	-	-	-

ASSEMBLY PART NUMBERS

	5-1924513-8	5-1924513-7	5-1924513-6	5-1924513-5	5-1924513-4	5-1924513-3	5-1924513-2	5-1924513-1	5-1924513-0	4-1924513-9	4-1924513-8	4-1924513-7	4-1924513-6	4-1924513-5	4-1924513-4	4-1924513-3	4-1924513-2	4-1924513-1	4-1924513-0	3-1924513-9	3-1924513-8	3-1924513-7	3-1924513-6	3-1924513-5	3-1924513-4	3-1924513-3	3-1924513-2	3-1924513-1	3-1924513-0	2-1924513-9	2-1924513-8	2-1924513-7	2-1924513-6	2-1924513-5	2-1924513-4	2-1924513-3	2-1924513-2	2-1924513-1	2-1924513-0	1-1924513-9	1-1924513-8	1-1924513-7	1-1924513-6	1-1924513-5	1-1924513-4	1-1924513-3	1-1924513-2	1-1924513-1	1-1924513-0	1924513-9	1924513-8	1924513-7	1924513-6	1924513-5	1924513-4	1924513-3	1924513-2	1924513-1	1438679-1	1438620-1		1438619-1	1438618-4	1438618-3	1438618-2	1438618-1		1438617-1				
																																																																					6	CAM LEVER	PBT 30% GF	GRAY
	1	1	1	1	1	1	1	1	1	1	1	1	1	1	1	1	1	1	1	1	1	1	1	1	1	1	1	1	1	1	1	1	1	1	1	1	1	1	1	1	1	1	1	1	1	1	1	1	1	1	1	1	1	1	1	1	1	1											6	CAM LEVER WITH MODIFIED TAB	PA66 35% GF	GRAY
																																																											1	1		1	1	1	1	1		1	6	CAM LEVER WITH MODIFIED TAB	PBT 30% GF	GRAY
	1	1	1	1	1	1	1	1	1	1	1	1	1	1	1	1	1	1	1	1	1	1	1	1	1	1	1	1	1	1	1	1	1	1	1	1	1	1	1	1	1	1	1	1	1	1	1	1	1	1	1	1	1	1	1	1	1	1	1	1		1	1	1	1	1		1	5	PERIMETER SEAL	SILICONE	GREEN
	1	1	1	1	1	1	1	1	1	1	1	1	1	1	1	1	1	1	1	1	1	1	1	1	1	1	1	1	1	1	1	1	1	1	1	1	1	1	1	1	1	1	1	1	1	1	1	1	1	1	1	1	1	1	1	1	1	1	1	1		1	1	1	1	1		1	4	GROMMET	SILICONE	BROWN
	1	1	1	1	1	1	1	1	1	1	1	1	1	1	1	1	1	1	1	1	1	1	1	1	1	1	1	1	1	1	1	1	1	1	1	1	1	1	1	1	1	1	1	1	1	1	1	1	1	1	1	1	1	1	1	1	1	1	1	1		1	1	1	1	1		1	3	COVER	PA66 35% GF	BLACK
	1	1	1	1	1	1	1	1	1	1	1	1	1	1	1	1	1	1	1	1	1	1	1	1	1	1	1	1	1	1	1	1	1	1	1	1	1	1	1	1	1	1	1	1	1	1	1	1	1	1	1	1	1	1	1	1	1	1											2	TPA FOR NON-SHORTING BAR APPLICATIONS	sPS 30% GF	NATURAL
																																																											1	1		1	1	1	1	1		1	2	TPA FOR NON-SHORTING BAR APPLICATIONS	sPS 30% GF	RED
																																																											1										1	PLUG WITH KEYING OPTION "K" AND 5 SHORTING BAR POSITIONS CONFIGURATION	PA66 35% GF	BLACK
																																																												1									1	PLUG WITH KEYING OPTION "L" AND 5 SHORTING BAR POSITIONS CONFIGURATION	PA66 35% GF	BLACK
	1	1	1	1	1	1	1	1	1	1	1	1	1	1	1	1	1	1	1	1	1	1	1	1	1	1	1	1	1	1	1	1	1	1	1	1	1	1	1	1	1	1	1	1	1	1	1	1	1	1	1	1	1	1	1	1	1	1				1							1	PLUG WITH KEYING OPTION "J" AND 5 SHORTING BAR POSITIONS CONFIGURATION	PA66 35% GF	BLACK
																																																															1	1	1	1			1	PLUG WITH KEYING OPTION "H" AND 5 SHORTING BAR POSITIONS CONFIGURATION	PA66 35% GF	BLACK
																																																																				1	1	PLUG WITH KEYING OPTION "G" AND 5 SHORTING BAR POSITIONS CONFIGURATION	PA66 35% GF	BLACK
QUANTITY																																																																					ITEM	DESCRIPTION	MATERIAL	FINISH/COLOR

ASSEMBLY PART NUMBERS

																																								3-1438098-2	3-1438098-1	3-1438098-0	2-1438098-9	2-1438098-8	2-1438098-7														5-1438099-1	5-1438099-0	4-1438099-9	4-1438099-8	4-1438099-7	4-1438099-6	4-1438099-5	4-1438099-4	4-1438099-3	4-1438099-2	4-1438099-1				
																																								1	1	1	1	1	1														1	1	1	1	1	1	1	1	1	1	1	6	CAM LEVER	PBT 30% GF	GRAY
																																																																					6	CAM LEVER WITH MODIFIED TAB	PA66 35% GF	GRAY
																																																																					6	CAM LEVER WITH MODIFIED TAB	PBT 30% GF	GRAY
																																								1	1	1	1	1	1														1	1	1	1	1	1	1	1	1	1	1	5	PERIMETER SEAL	SILICONE	GREEN
																																								1	1	1	1	1	1														1	1	1	1	1	1	1	1	1	1	1	4	GROMMET	SILICONE	BROWN
																																								1	1	1	1	1	1														1	1	1	1	1	1	1	1	1	1	1	3	COVER	PA66 35% GF	BLACK
																																																																					2	TPA FOR NON-SHORTING BAR APPLICATIONS	sPS 30% GF	NATURAL
																																								1	1	1	1	1	1														1	1	1	1	1	1	1	1	1	1	1	2	TPA FOR NON-SHORTING BAR APPLICATIONS	sPS 30% GF	RED
																																																																					1	PLUG WITH KEYING OPTION "K" AND 5 SHORTING BAR POSITIONS CONFIGURATION	PA66 35% GF	BLACK
																																																																					1	PLUG WITH KEYING OPTION "L" AND 5 SHORTING BAR POSITIONS CONFIGURATION	PA66 35% GF	BLACK
																																																											1	1	1	1	1	1	1	1	1	1	1	1	PLUG WITH KEYING OPTION "J" AND 5 SHORTING BAR POSITIONS CONFIGURATION	PA66 35% GF	BLACK
																																								1	1	1	1	1	1																									1	PLUG WITH KEYING OPTION "H" AND 5 SHORTING BAR POSITIONS CONFIGURATION	PA66 35% GF	BLACK
																																																																					1	PLUG WITH KEYING OPTION "G" AND 5 SHORTING BAR POSITIONS CONFIGURATION	PA66 35% GF	BLACK
QUANTITY																																																																					ITEM	DESCRIPTION	MATERIAL	FINISH/COLOR

ASSEMBLY PART NUMBERS

4-1438099-0	3-1438099-9	3-1438099-8	3-1438099-7	3-1438099-6	3-1438099-5	3-1438099-4	3-1438099-3	3-1438099-2	3-1438099-1	3-1438099-0	2-1438099-9	2-1438099-8	2-1438099-7	2-1438099-6	2-1438099-5	2-1438099-4	2-1438099-3	2-1438099-2	2-1438099-1	2-1438099-0	1-1438099-9	1-1438099-8	1-1438099-7	1-1438099-6	1-1438099-5	1-1438099-4	1-1438099-3	1-1438099-2	1-1438099-1	1-1438099-0	1438099-9	1438099-8	1438099-7	1438099-6	1438099-5	1438099-4	1438099-3	1438099-2	1438099-1		2-1438098-6	2-1438098-5	2-1438098-4	2-1438098-3	2-1438098-2	2-1438098-1	2-1438098-0	1-1438098-9	1-1438098-8	1-1438098-7	1-1438098-6	1-1438098-5	1-1438098-4	1-1438098-3	1-1438098-2	1-1438098-1	1-1438098-0	1438098-9	1438098-8	1438098-7	1438098-6	1438098-5	1438098-4	1438098-3	1438098-2	1438098-1	8-1419157-5	8-1419157-7				
1	1	1	1	1	1	1	1	1	1	1	1	1	1	1	1	1	1	1	1	1	1	1	1	1	1	1	1	1	1	1	1	1	1	1	1	1	1	1	1		1	1	1	1	1	1	1	1	1	1	1	1	1	1	1	1	1	1	1	1	1	1	1	1	1	1	1	1	6	CAM LEVER	PBT 30% GF	GRAY
																																																																					6	CAM LEVER WITH MODIFIED TAB	PA66 35% GF	GRAY
																																																																					6	CAM LEVER WITH MODIFIED TAB	PBT 30% GF	GRAY
1	1	1	1	1	1	1	1	1	1	1	1	1	1	1	1	1	1	1	1	1	1	1	1	1	1	1	1	1	1	1	1	1	1	1	1	1	1	1	1		1	1	1	1	1	1	1	1	1	1	1	1	1	1	1	1	1	1	1	1	1	1	1	1	1	1	1	1	5	PERIMETER SEAL	SILICONE	GREEN
1	1	1	1	1	1	1	1	1	1	1	1	1	1	1	1	1	1	1	1	1	1	1	1	1	1	1	1	1	1	1	1	1	1	1	1	1	1	1	1		1	1	1	1	1	1	1	1	1	1	1	1	1	1	1	1	1	1	1	1	1	1	1	1	1	1	1	1	4	GROMMET	SILICONE	BROWN
1	1	1	1	1	1	1	1	1	1	1	1	1	1	1	1	1	1	1	1	1	1	1	1	1	1	1	1	1	1	1	1	1	1	1	1	1	1	1	1		1	1	1	1	1	1	1	1	1	1	1	1	1	1	1	1	1	1	1	1	1	1	1	1	1	1	1	1	3	COVER	PA66 35% GF	BLACK
																																																																					2	TPA FOR NON-SHORTING BAR APPLICATIONS	sPS 30% GF	NATURAL
1	1	1	1	1	1	1	1	1	1	1	1	1	1	1	1	1	1	1	1	1	1	1	1	1	1	1	1	1	1	1	1	1	1	1	1	1	1	1	1		1	1	1	1	1	1	1	1	1	1	1	1	1	1	1	1	1	1	1	1	1	1	1	1	1	1	1	1	2	TPA FOR NON-SHORTING BAR APPLICATIONS	sPS 30% GF	RED
																																																																					1	PLUG WITH KEYING OPTION "K" AND 5 SHORTING BAR POSITIONS CONFIGURATION	PA66 35% GF	BLACK
																																																																					1	PLUG WITH KEYING OPTION "L" AND 5 SHORTING BAR POSITIONS CONFIGURATION	PA66 35% GF	BLACK
1	1	1	1	1	1	1	1	1	1	1	1	1	1	1	1	1	1	1	1	1	1	1	1	1	1	1	1	1	1	1	1	1	1	1	1	1	1	1	1																														1	PLUG WITH KEYING OPTION "J" AND 5 SHORTING BAR POSITIONS CONFIGURATION	PA66 35% GF	BLACK
																																									1	1	1	1	1	1	1	1	1	1	1	1	1	1	1	1	1	1	1	1	1	1	1	1	1	1			1	PLUG WITH KEYING OPTION "H" AND 5 SHORTING BAR POSITIONS CONFIGURATION	PA66 35% GF	BLACK
																																																																			1	1	1	PLUG WITH KEYING OPTION "G" AND 5 SHORTING BAR POSITIONS CONFIGURATION	PA66 35% GF	BLACK
QUANTITY																																																																					ITEM	DESCRIPTION	MATERIAL	FINISH/COLOR

THIS DRAWING IS A CONTROLLED DOCUMENT.

DIMENSIONS: mm

TOLERANCES UNLESS OTHERWISE SPECIFIED:
0 PLC ±-
1 PLC ±0.3
2 PLC ±0.10
3 PLC ±-
4 PLC ±-
ANGLES ±3°

MATERIAL: SEE CHART ON SHEET 2

FINISH: - -

DWN M. FORISKA 19APR2002
CHK M. FORISKA 19APR2002
APVD A. VALASEK 19APR2002
PRODUCT SPEC -
APPLICATION SPEC -
WEIGHT SEE NOTE 5

TE Connectivity

NAME: 40 WAY ARM, PLUG ASSEMBLY WITHOUT SHORTING BARS, CUSTOMER SPEC.

SIZE A1 | CAGE CODE 00779 | DRAWING NO C-8-1419157-7 | RESTRICTED TO

CUSTOMER DRAWING | SCALE 3:1 | SHEET 2 OF 5 | REV CJ

THIS DRAWING IS UNPUBLISHED. RELEASED FOR PUBLICATION
© COPYRIGHT 2018 BY - TE CONNECTIVITY ALL RIGHTS RESERVED.

REVISIONS

P	LTR	DESCRIPTION	DATE	DWN	APVD
	-	SEE SHEET 1	-	-	-

ASSEMBLY PART NUMBERS

2138987-2	2138987-1	2098034-1	1-1438435-6	1-1438435-5	1-1438435-4	1-1438435-3	1-1438435-2	1-1438435-1	1-1438435-0	1438435-9	1438435-8	1438435-7	1438435-6	1438435-5	1438435-4	1438435-3	1438435-2	1438435-1	ITEM	DESCRIPTION	MATERIAL	FINISH/COLOR
1	1		1	1	1	1	1	1	1	1	1	1	1	1	1	1	1	1	6	CAM LEVER	PBT 30% GF	GRAY
		1																	6	CAM LEVER WITH MODIFIED TAB	PA66 35% GF	GRAY
																			6	CAM LEVER WITH MODIFIED TAB	PBT 30% GF	GRAY
1	1	1	1	1	1	1	1	1	1	1	1	1	1	1	1	1	1	1	5	PERIMETER SEAL	SILICONE	GREEN
1	1	1	1	1	1	1	1	1	1	1	1	1	1	1	1	1	1	1	4	GROMMET	SILICONE	BROWN
1	1	1	1	1	1	1	1	1	1	1	1	1	1	1	1	1	1	1	3	COVER	PA66 35% GF	BLACK
		1																	2	TPA FOR NON-SHORTING BAR APPLICATIONS	sPS 30% GF	NATURAL
1	1		1	1	1	1	1	1	1	1	1	1	1	1	1	1	1	1	2	TPA FOR NON-SHORTING BAR APPLICATIONS	sPS 30% GF	RED
																			1	PLUG WITH KEYING OPTION "K" AND 5 SHORTING BAR POSITIONS CONFIGURATION	PA66 35% GF	BLACK
			1	1	1	1	1	1	1	1	1	1	1	1	1	1	1	1	1	PLUG WITH KEYING OPTION "L" AND 5 SHORTING BAR POSITIONS CONFIGURATION	PA66 35% GF	BLACK
																			1	PLUG WITH KEYING OPTION "J" AND 5 SHORTING BAR POSITIONS CONFIGURATION	PA66 35% GF	BLACK
		1																	1	PLUG WITH KEYING OPTION "H" AND 5 SHORTING BAR POSITIONS CONFIGURATION	PA66 35% GF	BLACK
1	1																		1	PLUG WITH KEYING OPTION "G" AND 5 SHORTING BAR POSITIONS CONFIGURATION	PA66 35% GF	BLACK
QUANTITY																						

THIS DRAWING IS A CONTROLLED DOCUMENT.

DIMENSIONS: mm

TOLERANCES UNLESS OTHERWISE SPECIFIED:
0 PLC ±-
1 PLC ±0.3
2 PLC ±0.10
3 PLC ±-
4 PLC ±-
ANGLES ±1°

MATERIAL: SEE CHART ON SHEET 2

FINISH: - -

DWN M. FORISKA 19APR2002
CHK M. FORISKA 19APR2002
APVD A. VALASEK 19APR2002

PRODUCT SPEC -
APPLICATION SPEC -
WEIGHT -

TE Connectivity

NAME: 40 WAY ARM, PLUG ASSEMBLY WITHOUT SHORTING BARS, CUSTOMER SPEC.

SIZE A1 | CAGE CODE 00779 | DRAWING NO C-8-1419157-7 | RESTRICTED TO

CUSTOMER DRAWING | SCALE 3:1 | SHEET 3 OF 5 | REV CJ

4805 (3/13)

THIS DRAWING IS UNPUBLISHED. RELEASED FOR PUBLICATION
© COPYRIGHT 2018 BY - TE CONNECTIVITY ALL RIGHTS RESERVED.

REVISIONS					
P	LTR	DESCRIPTION	DATE	DWN	APVD
	-	SEE SHEET 1	-	-	-

PIN-OUT CHART

				5	6							13	14	15	16					21	22	23	24								32	33				37				4-1438099-4	KEY "J"
1	2			5	6	7	8			11	12	13	14	15	16			19	20	21	22	23	24		26	27	28	29			32	33				37		39	40	4-1438099-3	KEY "J"
				5	6							13	14	15	16					21	22	23	24								32	33				37		39	40	4-1438099-2	KEY "J"
1	2			5	6	7	8			11	12	13	14	15	16			19	20	21	22	23	24		26	27	28	29		31	32	33		35	36	37	38	39	40	4-1438099-1	KEY "J"
				5	6							13	14	15	16					21	22	23	24							31	32	33		35	36	37	38	39	40	4-1438099-0	KEY "J"
1	2			5	6	7	8			11	12	13	14	15	16			19	20	21	22	23	24		26	27	28	29		31	32	33		35	36	37	38			3-1438099-9	KEY "J"
1	2	3	4	5	6	7	8			11	12	13	14	15	16			19	20	21	22	23	24		26	27	28	29		31	32	33		35	36	37	38			3-1438099-8	KEY "J"
				5	6							13	14	15	16														30	31				35	36	37	38			3-1438099-7	KEY "J"
				5	6							13	14	15	16														30	31				35	36	37	38	39	40	3-1438099-6	KEY "J"
1	2	3	4	5	6	7	8			11	12	13	14	15	16			19	20	21	22	23	24		26	27	28	29			32	33	34							3-1438099-5	KEY "J"
		3	4	5	6							13	14	15	16																32	33	34							3-1438099-4	KEY "J"
				5	6							13	14	15	16					21	22	23	24							31	32	33		35	36	37	38			3-1438099-3	KEY "J"
		3	4	5	6							13	14	15	16					21	22	23	24							31	32	33		35	36	37	38	39		3-1438099-2	KEY "J"
		3	4	5	6							13	14	15	16															31	32	33	34	35	36		38			3-1438099-1	KEY "J"
		3	4	5	6							13	14	15	16															31				35	36	37	38			3-1438099-0	KEY "J"
		3	4									13	14																	31	32			35	36	37	38			2-1438099-9	KEY "J"
		3	4	5	6							13	14	15	16					21	22	23	24							31	32	33		35	36	37	38	39	40	2-1438099-8	KEY "J"
		3	4	5	6							13	14	15	16					21	22	23	24							31	32			35	36	37	38	39	40	2-1438099-7	KEY "J"
		3	4	5	6							13	14	15	16					21	22	23								31	32			35	36	37	38	39	40	2-1438099-6	KEY "J"
												13	14											25	26					31								39	40	2-1438099-5	KEY "J"
1	2			5	6	7	8			11	12			15	16	17	18			21	22	23	24	25	26			29	30	31	32	33		35	36	37	38	39	40	2-1438099-4	KEY "J"
				5	6	7	8							15	16	17	18					23	24	25	26											37	38	39	40	2-1438099-3	KEY "J"
		3	4	5	6					11	12			15	16															31	32			35	36	37	38	39	40	2-1438099-2	KEY "J"
		3	4	5	6							13	14	15	16															31	32		34	35	36	37	38	39	40	2-1438099-1	KEY "J"
1	2									11	12													25	26					31								39	40	2-1438099-0	KEY "J"
1	2			5	6	7	8			11	12			15	16	17	18	19	20	21	22	23	24	25	26			29	30	31	32	33		35	36	37	38	39	40	1-1438099-9	KEY "J"
																						23	24	25	26					31						37	38	39	40	1-1438099-8	KEY "J"
										11	12											23	24	25	26					31						37	38	39	40	1-1438099-7	KEY "J"
										11	12													25	26					31								39	40	1-1438099-6	KEY "J"
																								25	26					31								39	40	1-1438099-5	KEY "J"
																								25	26			29	30	31								39	40	1-1438099-4	KEY "J"
1	2	3	4	5	6	7	8	9	10	11	12	13	14	15	16	17	18	19	20	21	22	23	24	25					30	31	32	33	34	35	36	37	38	39	40	1-1438099-3	KEY "J"
		3	4	5	6							13	14	15	16															31				35	36	37	38	39	40	1-1438099-2	KEY "J"
		3	4	5	6					11	12			15	16					21	22	23	24							31	32	33		35	36	37	38	39	40	1-1438099-1	KEY "J"
				5	6					11	12	13	14	15	16					21	22	23	24							31	32			35	36	37	38	39	40	1-1438099-0	KEY "J"
				5	6									15	16															31	32			35	36	37	38	39	40	1438099-9	KEY "J"
				5	6							13	14	15	16					21	22	23	24									33								2-1438098-6	KEY "H"
1	2	3	4	5	6	7	8			11	12	13	14	15	16			19	20		22	23	24		26	27	28	29		31	32	33	34		36	37	38	39	40	2-1438098-5	KEY "H"
		3	4	5	6							13	14	15	16						22	23	24							31	32	33	34		36	37	38	39	40	2-1438098-4	KEY "H"
		3	4	5	6							13	14	15	16									25					30		32	33		35		37		39		2-1438098-3	KEY "H"
1	2	3	4	5	6	7	8			11	12	13	14	15	16			19	20		22	23	24	25	26	27	28	29	30	31	32	33		35		37		39		2-1438098-2	KEY "H"
																																								1438679-1	KEY "K"
																																								1438620-1	KEY "L"
																																								1438619-1	KEY "J"
																																								1438618-1	KEY "H"
																																								1438617-1	KEY "G"
		3	4	5	6							13	14	15	16					21	22	23	24							31	32			35	36	37	38	39	40	2-1438098-1	KEY "H"
		3	4	5	6							13	14	15	16					21	22	23	24						30	31	32	33		35	36	37	38	39	40	2-1438098-0	KEY "H"
		3	4	5	6							13	14	15	16						22	23							30	31	32	33	34	35		37		39		1-1438098-9	KEY "H"
		3	4	5	6							13	14	15	16					21	22	23	24									33					38			1-1438435-0	KEY "L"
1	2	3	4	5	6	7	8			11	12	13	14	15	16			19	20	21	22	23	24		26	27	28	29	30	31	32	33		35	36	37	38	39	40	1438435-9	KEY "L"
1	2	3	4	5	6	7	8	9	10	11	12	13	14	15	16	17	18	19	20	21	22	23	24		26	27	28	29	30	31	32	33		35	36	37	38	39	40	1438435-8	KEY "L"
1	2	3	4	5	6					11	12	13	14	15	16					21	22	23	24							31	32	33		35	36	37	38	39	40	1438435-7	KEY "L"
1	2	3	4	5	6					11	12	13	14	15	16					21	22	23	24							31	32			35	36	37	38	39	40	1438435-6	KEY "L"
1	2	3	4	5	6					11	12	13	14	15	16					21	22	23	24						30	31	32	33		35	36	37	38	39	40	1438435-5	KEY "L"
		3	4	5	6							13	14	15	16					21	22	23	24							31	32	33		35	36	37	38	39	40	1438435-4	KEY "L"
1	2	3	4	5	6	7	8	9	10	11	12	13	14	15	16	17	18	19	20	21	22	23	24	25					30	31	32	33	34	35	36	37	38	39	40	1438435-3	KEY "L"
																																								1438435-2	KEY "L"
		3	4	5	6							13	14	15	16					21	22	23	24						30	31	32	33		35	36	37	38	39	40	1438435-1	KEY "L"
1	2	3	4	5	6	7	8			11	12	13	14	15	16			19	20		22	23			26	27	28	29	30	31	32	33	34	35		37		39		1-1438098-8	KEY "H"
		3	4	5	6							13	14	15	16						22	23								31	32	33	34	35		37		39		1-1438098-7	KEY "H"
1	2	3	4	5	6	7	8			11	12	13	14	15	16			19	20		22	23	24		26	27	28	29		31				35	36	37	38	39	40	1-1438098-6	KEY "H"
		3	4	5	6	7	8					13	14	15	16			19	20		22	23	24							31				35	36	37	38	39	40	1-1438098-5	KEY "H"
		3	4	5	6							13	14	15	16						22	23	24							31				35	36	37	38	39	40	1-1438098-4	KEY "H"
1	2	3	4	5	6	7	8			11	12	13	14	15	16			19	20		22	23	24		26	27	28	29	30	31	32	33	34	35	36	37	38	39	40	1-1438098-3	KEY "H"
		3	4	5	6							13	14	15	16						22	23	24						30	31	32	33	34	35	36	37	38	39	40	1-1438098-2	KEY "H"
1	2	3	4	5	6					11	12	13	14	15	16					21	22	23	24							31	32			35	36	37	38	39	40	1438099-8	KEY "J"
1	2	3	4	5	6	7	8			11	12	13	14	15	16			19	20	21	22	23	24			27	28	29	30	31	32			35	36	37	38	39	40	1-1438098-1	KEY "H"
		3	4	5	6							13	14	15	16						22	23								31				35		37		39		1-1438098-0	KEY "H"
1	2	3	4	5	6	7	8	9	10	11	12	13	14	15	16	17	18			21	22	23	24	25	26			29	30	31	32		34	35	36	37	38	39	40	1438098-9	KEY "H"
1	2	3	4	5	6	7	8	9	10	11	12	13	14	15	16					21	22		24									33		35						1438099-7	KEY "J"
1	2	3	4	5	6	7	8	9	10	11	12	13	14	15	16					21	22	23	24	25	26					31	32	33	34	35	36					1438099-6	KEY "J"
		3	4	5	6							13	14	15	16						22	23								31	32			35		37		39		1438099-5	KEY "J"
		3	4	5	6							13	14	15	16					21	22	23	24						30	31	32	33		35	36	37	38	39	40	1438099-4	KEY "J"
1	2	3	4	5	6	7	8	9	10	11	12	13	14	15	16					21	22		24											35						1438099-3	KEY "J"
1	2	3	4	5	6	7	8	9	10	11	12	13	14	15	16					21	22		24							31	32	33		35						1438099-2	KEY "J"
1	2	3	4	5	6	7	8	9	10	11	12	13	14	15	16	17	18			21	22		24					29	30			33		35		37	38	39	40	1438098-8	KEY "H"
1	2	3	4	5	6	7	8	9	10	11	12	13	14	15	16	17	18			21	22	23	24	25	26			29	30	31	32	33	34	35	36	37	38	39	40	1438098-7	KEY "H"
1	2	3	4	5	6					11	12	13	14	15	16					21	22	23	24						30	31	32	33		35	36	37	38	39	40	1438098-6	KEY "H"
1	2	3	4	5	6	7	8			11	12	13	14	15	16			19	20		22	23			26	27	28	29		31	32			35		37		39		1438098-5	KEY "H"
1	2	3	4	5	6	7	8	9	10	11	12	13	14	15	16					21	22		24							31	32	33		35		37	38	39	40	1438098-4	KEY "H"
1	2	3	4	5	6	7	8	9	10	11	12	13	14	15	16	17	18			21	22		24					29	30					35		37	38	39	40	1438098-3	KEY "H"
1	2	3	4	5	6	7	8	9	10	11	12	13	14	15	16	17	18			21	22		24					29	30	31	32	33		35		37	38	39	40	1438098-2	KEY "H"
1	2	3	4	5	6	7	8	9	10														24											35	36					8-1419157-5	KEY "G"
																																								1438099-1	KEY "J"
																																								1438098-1	KEY "H"
																																								8-1419157-7	KEY "G"
1	2	3	4	5	6	7	8	9	10	11	12	13	14	15	16	17	18	19	20	21	22	23	24	25	26	27	28	29	30	31	32	33	34	35	36	37	38	39	40	ASSEMBLY PART NUMBER	PLUG KEYING OPTION

TERMINAL HOLE POSITION

CAVITIES WITH A NUMERIC SYMBOL INDICATE CLOSED TERMINAL HOLE POSITIONS

BLANK CAVITIES INDICATE OPEN TERMINAL HOLE POSITIONS

PIN-OUT CHART

																																								2098034-1	KEY "H"
1	2	3	4	5	6					11	12	13	14	15	16					21	22	23	24		26	27	28	29				33		35	36	37	38	39		1-1438435-6	KEY "L"
1	2	3	4	5	6					11	12	13	14	15	16					21	22	23	24									33		35	36	37	38	39		1-1438435-5	KEY "L"
		3	4	5	6							13	14	15	16					21	22	23	24							31	32	33			36		38			1-1438435-4	KEY "L"
		3	4	5	6							13	14	15	16					21	22	23	24									33		35	36	37	38	39		1-1438435-3	KEY "L"
		3	4	5	6							13	14	15	16					21	22	23	24									33			36		38			1-1438435-2	KEY "L"
1	2	3	4	5	6			9	10	11	12	13	14	15	16	17	18			21	22	23	24						30	31	32	33		35	36	37	38	39	40	1-1438435-1	KEY "L"
		3		5		7	8					13	14	15	16	17	18	19	20	21	22	23	24	25					30	31	32			35		37		39		4-1924513-8	KEY "J"
		3		5		7	8					13	14	15	16	17	18	19	20	21	22	23	24	25	26	27			30	31	32	33	34	35		37		39		4-1924513-7	KEY "J"
		3		5		7	8					13	14	15	16	17	18	19	20	21	22	23	24	25			28		30	31	32			35		37		39		4-1924513-6	KEY "J"
				5	6	7	8							15	16			19	20						26						32							39	40	4-1924513-5	KEY "J"
1	2			5	6	7	8			11	12			15	16	17	18	19	20	21	22	23	24		26						32			35	36	37	38	39	40	4-1924513-4	KEY "J"
						7	8									17	18							25	26					31								39	40	4-1924513-3	KEY "J"
		3		5		7	8					13	14	15	16	17	18	19	20	21	22	23	24	25	26	27	28		30	31	32	33	34	35		37		39		4-1924513-2	KEY "J"
												13	14											25	26					31								39	40	4-1924513-1	KEY "J"
		3		5		7	8					13	14	15	16	17	18	19	20	21	22	23	24	25	26	27	28		30	31	32	33	34	35		37			40	4-1924513-0	KEY "J"
						7	8									17	18																							3-1924513-9	KEY "J"
		3	4	5	6	7	8							15	16	17	18			21	22	23	24	25	26									35	36	37	38	39	40	3-1924513-8	KEY "J"
1	2	3	4	5	6	7	8			11	12	13	14	15	16	17	18			21	22	23	24	25	26	27	28	29	30	31	32	33	34	35	36	37	38	39	40	3-1924513-7	KEY "J"
1	2									11	12													25	26													39	40	3-1924513-6	KEY "J"
1	2									11	12													25	26			29	30	31								39	40	3-1924513-5	KEY "J"
				5	6	7	8							15	16	17	18					23	24	25	26			29	30							37	38	39	40	3-1924513-4	KEY "J"
				5	6	7	8							15	16	17	18					23	24	25	26					31						37	38	39	40	3-1924513-3	KEY "J"
																								25	26													39	40	3-1924513-2	KEY "J"
				5	6	7	8			11	12					17	18					23	24	25	26					31						37	38	39	40	3-1924513-1	KEY "J"
1	2									11	12							19	20					25	26			29	30	31	32	33						39	40	3-1924513-0	KEY "J"
1	2									11	12											23	24	25	26			29	30	31	32	33				37	38	39	40	2-1924513-9	KEY "J"
1	2									11	12							19	20			23	24	25	26			29	30	31	32	33				37	38	39	40	2-1924513-8	KEY "J"
1	2									11	12													25	26			29	30	31	32	33						39	40	2-1924513-7	KEY "J"
1	2			5	6	7	8			11	12			15	16	17	18			21	22	23	24	25	26			29	30	31	32	33		35	36	37	38	39	40	2-1924513-6	KEY "J"
		3	4									13	14									23	24	25	26					31						37	38	39	40	2-1924513-5	KEY "J"
		3	4									13	14											25	26					31								39	40	2-1924513-4	KEY "J"
				5	6	7	8							15	16	17	18					23	24	25	26			29	30	31						37	38	39	40	2-1924513-3	KEY "J"
		3	4	5	6					11	12			15	16															31	32			35	36	37	38	39	40	2-1924513-2	KEY "J"
		3	4	5	6							13	14	15	16															31	32		34	35	36	37	38	39	40	2-1924513-1	KEY "J"
1	2									11	12													25	26					31								39	40	2-1924513-0	KEY "J"
1	2			5	6	7	8			11	12			15	16	17	18	19	20	21	22	23	24	25	26			29	30	31	32	33		35	36	37	38	39	40	1-1924513-9	KEY "J"
																						23	24	25	26					31						37	38	39	40	1-1924513-8	KEY "J"
										11	12											23	24	25	26					31						37	38	39	40	1-1924513-7	KEY "J"
										11	12													25	26					31								39	40	1-1924513-6	KEY "J"
																								25	26					31								39	40	1-1924513-5	KEY "J"
																								25	26			29	30	31								39	40	1-1924513-4	KEY "J"
1	2	3	4	5	6	7	8	9	10	11	12	13	14	15	16	17	18	19	20	21	22	23	24	25						31	32	33	34	35	36	37	38	39	40	1-1924513-3	KEY "J"
		3	4	5	6							13	14	15	16															31				35	36	37	38	39	40	1-1924513-2	KEY "J"
		3	4	5	6					11	12			15	16					21	22	23	24							31	32	33		35	36	37	38	39	40	1-1924513-1	KEY "J"
				5	6					11	12	13	14	15	16					21	22	23	24							31	32			35	36	37	38	39	40	1-1924513-0	KEY "J"
				5	6									15	16															31	32			35	36	37	38	39	40	1924513-9	KEY "J"
1	2	3	4	5	6					11	12	13	14	15	16					21	22	23	24							31	32			35	36	37	38	39	40	1924513-8	KEY "J"
1	2	3	4	5	6	7	8	9	10	11	12	13	14	15	16					21	22		24									33		35						1924513-7	KEY "J"
1	2	3	4	5	6	7	8	9	10	11	12	13	14	15	16					21	22	23	24	25	26					31	32	33	34	35	36					1924513-6	KEY "J"
		3	4	5	6							13	14	15	16						22	23								31	32			35		37		39		1924513-5	KEY "J"
		3	4	5	6							13	14	15	16					21	22	23	24						30	31	32	33		35	36	37	38	39	40	1924513-4	KEY "J"
1	2	3	4	5	6	7	8	9	10	11	12	13	14	15	16					21	22		24											35						1924513-3	KEY "J"
1	2	3	4	5	6	7	8	9	10	11	12	13	14	15	16					21	22		24							31	32	33		35						1924513-2	KEY "J"
																																								1924513-1	KEY "J"
		3	4									13	14																	31				35	36	37	38			5-1438099-1	KEY "J"
		3	4									13	14							21	22	23	24							31	32							39	40	5-1438099-0	KEY "J"
				5	6							13	14	15	16					21	22	23	24									33								4-1438099-9	KEY "J"
		3	4									13	14																	31	32									4-1438099-8	KEY "J"
1	2	3	4	5	6	7	8			11	12	13	14	15	16			19	20	21	22	23	24		26	27	28	29	30	31	32	33	34	35	36	37	38			4-1438099-7	KEY "J"
		3	4	5	6							13	14	15	16					21	22	23	24							31	32	33		35	36	37	38			4-1438099-6	KEY "J"
1	2			5	6	7	8			11	12	13	14	15	16			19	20	21	22	23	24		26	27	28	29			32	33				37				4-1438099-5	KEY "J"
				5	6		8	9	10	11	12	13	14	15	16		18	19	20	21	22		24	25			28			31	32		34	35	36	37	38		40	1438618-4	KEY "H"
		3	4	5	6							13	14																			33	34		36	37	38	39		1438618-3	KEY "H"
		3	4	5	6							13	14	15	16																	33	34		36	37	38	39		1438618-2	KEY "H"
																																33		35		37		39	40	3-1438098-2	KEY "H"
1	2	3	4	5	6	7	8			11	12	13	14	15	16			19	20		22	23	24	25	26	27	28	29	30	31	32	33	34	35	36	37	38	39	40	3-1438098-1	KEY "H"
		3	4	5	6							13	14	15	16									25					30		32	33	34	35	36	37	38	39	40	3-1438098-0	KEY "H"
		3	4	5	6																											33		35		37		39	40	2-1438098-9	KEY "H"
				5	6							13	14	15	16					21	22	23	24									33		35	36	37	38	39		2-1438098-8	KEY "H"
		3	4	5	6							13	14	15	16					21	22	23	24									33		35	36	37	38	39		2-1438098-7	KEY "H"
1	2	3	4	5	6	7	8	9	10	11	12	13	14	15	16	17	18	19	20	21	22	23	24	25	26	27	28	29	30	31	32	33	34	35	36	37	38	39	40	ASSEMBLY PART NUMBER	PLUG KEYING OPTION

TERMINAL HOLE POSITION

CAVITIES WITH A NUMERIC SYMBOL INDICATE CLOSED TERMINAL HOLE POSITIONS

BLANK CAVITIES INDICATE OPEN TERMINAL HOLE POSITIONS

THIS DRAWING IS A CONTROLLED DOCUMENT.	DWN M. FORISKA 19APR2002 CHK M. FORISKA 19APR2002 APVD A. VALASEK 19APR2002	TE Connectivity	
DIMENSIONS: mm	TOLERANCES UNLESS OTHERWISE SPECIFIED: 0 PLC ±- 1 PLC ±0.3 2 PLC ±0.10 3 PLC ±- 4 PLC ±- ANGLES ±3°	PRODUCT SPEC - APPLICATION SPEC -	NAME 40 WAY ARM, PLUG ASSEMBLY WITHOUT SHORTING BARS, CUSTOMER SPEC.
MATERIAL SEE CHART ON SHEET 2	FINISH - -	WEIGHT -	SIZE A1 / CAGE CODE 00779 / DRAWING NO C-8-1419157-7 / RESTRICTED TO
		CUSTOMER DRAWING	SCALE 3:1 / SHEET 4 OF 5 / REV CJ

THIS DRAWING IS UNPUBLISHED. RELEASED FOR PUBLICATION
© COPYRIGHT 2018 BY - TE CONNECTIVITY ALL RIGHTS RESERVED.

REVISIONS

P	LTR	DESCRIPTION	DATE	DWN	APVD
	-	SEE SHEET 1	-	-	-

PIN-OUT CHART

1	2	3	4	5	6	7	8	9	10	11	12	13	14	15	16	17	18	19	20	21	22	23	24	25	26	27	28	29	30	31	32	33	34	35	36	37	38	39	40	ASSEMBLY PART NUMBER	PLUG KEYING OPTION
																	18			21		23		25	26	27	28	29	30					35			38			5-1924513-8	KEY "J"
																	18			21		23	24	25	26	27	28	29	30			33		35			38			5-1924513-7	KEY "J"
																	18			21		23	24	25	26	27	28	29	30	31		33		35			38			5-1924513-6	KEY "J"
																	18			21		23		25	26	27		29	30					35						5-1924513-5	KEY "J"
																	18			21		23	24	25	26	27		29	30			33		35						5-1924513-4	KEY "J"
																	18			21		23	24	25	26	27		29	30	31		33		35						5-1924513-3	KEY "J"
	2																18			21		23	24	25	26	27	28	29	30			33		35			38			5-1924513-2	KEY "J"
																									26	27	28					33	34							5-1924513-1	KEY "J"
																									26	27						33	34							5-1924513-0	KEY "J"
																											28													4-1924513-9	KEY "J"
		3	4	5	6							13	14	15	16					21	22	23	24									33		35	36	37	38	39		2138987-2	KEY "G"
																																								2138987-1	KEY "G"

TERMINAL HOLE POSITION

CAVITIES WITH A NUMERIC SYMBOL INDICATE
CLOSED TERMINAL HOLE POSITIONS
BLANK CAVITIES INDICATE
OPEN TERMINAL HOLE POSITIONS

4805 (3/13)

THIS DRAWING IS A CONTROLLED DOCUMENT.

DIMENSIONS: mm

TOLERANCES UNLESS OTHERWISE SPECIFIED:
0 PLC ±-
1 PLC ±0.3
2 PLC ±0.10
3 PLC ±-
4 PLC ±-
ANGLES ±1°

MATERIAL: SEE CHART ON SHEET 2

FINISH: - / -

DWN M. FORISKA 19APR2002
CHK M. FORISKA 19APR2002
APVD A. VALASEK 19APR2002

PRODUCT SPEC: -
APPLICATION SPEC: -
WEIGHT: -

TE Connectivity

NAME: 40 WAY ARM, PLUG ASSEMBLY WITHOUT SHORTING BARS, CUSTOMER SPEC.

SIZE	CAGE CODE	DRAWING NO	RESTRICTED TO
A1	00779	C-8-1419157-7	

CUSTOMER DRAWING | SCALE 3:1 | SHEET 5 OF 5 | REV CJ

Mouser Electronics

Authorized Distributor

Click to View Pricing, Inventory, Delivery & Lifecycle Information:

TE Connectivity:

1-1924513-5