Sep.1.2020 Copyright 2020 HIROSE ELECTRIC CO., LTD. All Rights Reserved.
In case of consideration for using Automotive equipment / device which demand high reliability, kindly contact our sales window correspondents.

	COUNT	DESCRIPTION OF REVISIONS	BY	CHKD	DATE		COUNT	DESCRIPTION OF REVISIONS	BY	CHKD	DATE
△					. .	△					. .
△					. .	△					. .
△					. .	△					. .

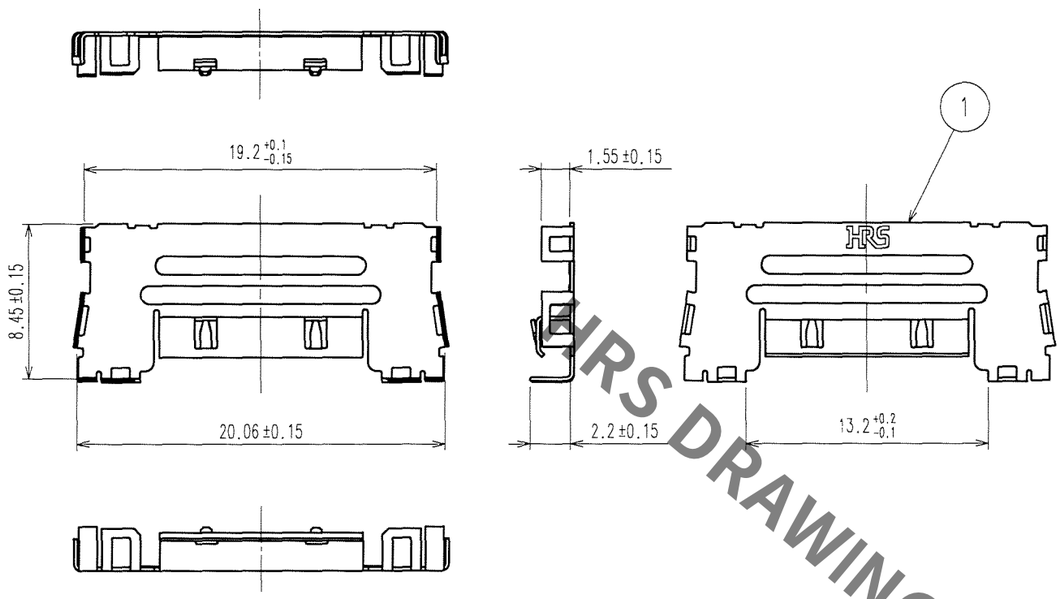

DETAILED FIGURE OF REEL (FREE)

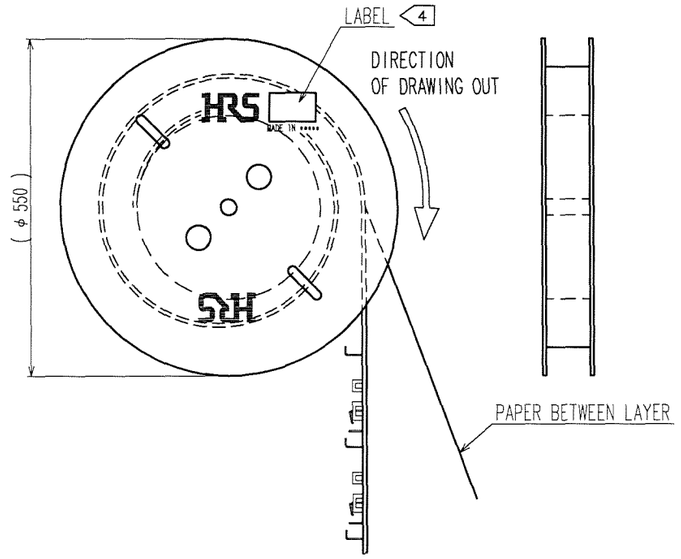

DETAILED FIGURE OF CAREER (2 : 1)

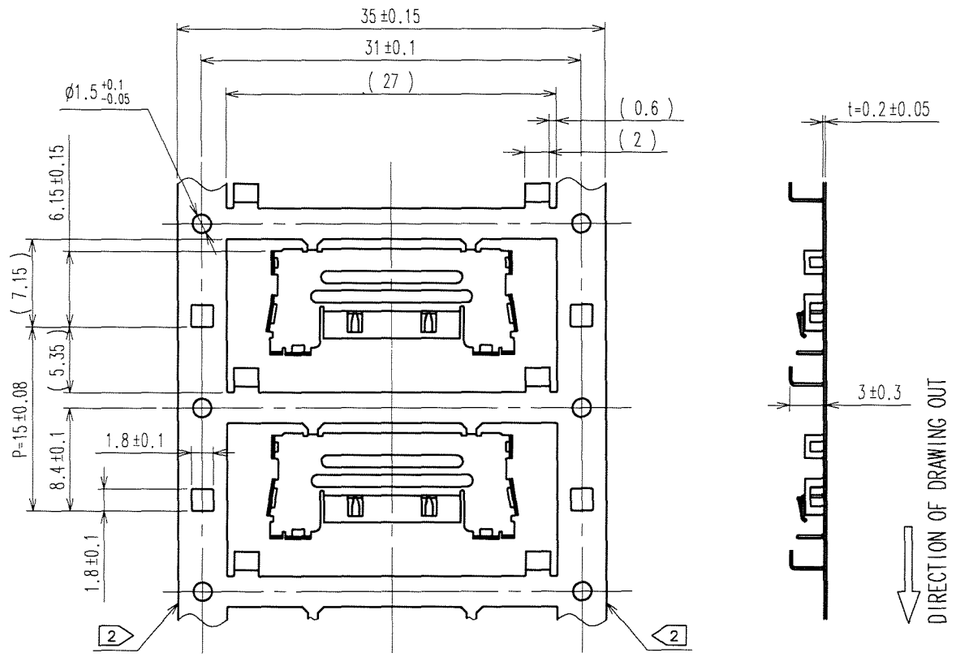

NOTE 1. MANUFACTURING PROCESS COULD LEAVE SCRATCH AND/OR PUNCH MARKS HAVING NO AFFECT ON THE PRODUCT PERFORMANCE.
2 SIDE CUT CAN BE PROVIDED TO PREVENT CARRIER CURVE.
3. 2500 PIECES PER REEL.
4 LABEL AS SHOWN BELOW IS INDICATED.

HRS		INSPECTION 検 査
CODE No. 品名コード	CL575-3311-0	
PART NO. 品 名	FX16-21P-GND	
QTY. 数 量	2,500 PCS	
PECULIAR 仕 様		
Lot No		
SPLICE 継ぎ目		

5. DIMENSION IN ( ) ARE FOR REFERENCE.
6. THIS IS A COMPONENT FOR SEPARATELY AVAILABLE PRODUCT;FX16-21P-0.5FC OR FX16-21P-0.5SD. WHEN MICRO COAXIAL CABLE IS USED FOR THE CABLE, MAKE SURE TO USE WITH THE SPECIFIED COMBINATION.

NO.	MATERIAL	FINISH, REMARKS	NO.	MATERIAL	FINISH, REMARKS
			1	STAINLESS	

CODE NO.(OLD)	DRAWN	DESIGNED	CHECKED	APPROVED	RELEASED
CL	K.SHIBUYA 08.01.24	K. Shibuya 08.01.25	H. Yamaguchi 08.01.25	H. Ohkawa 08.01.25	. .

SCALE FREE	DRAWING NO. EDC3-157683	PART NO. FX16-21P-GND
UNITS mm	HRS HIROSE ELECTRIC CO., LTD	CODE NO. CL575-3311-0 1/1

TO

FORM NO.229

HRS DRAWING FOR REFERENCE