THIS COPY IS PROVIDED ON A RESTRICTED BASIS AND IS NOT TO BE USED IN ANY WAY DETRIMENTAL TO THE INTERESTS OF PANDUIT CORP.

E

PANDUIT PART NUMBER	WEIGHT
FLB FLBM	1.05 LB/EACH (474g/EACH)

I

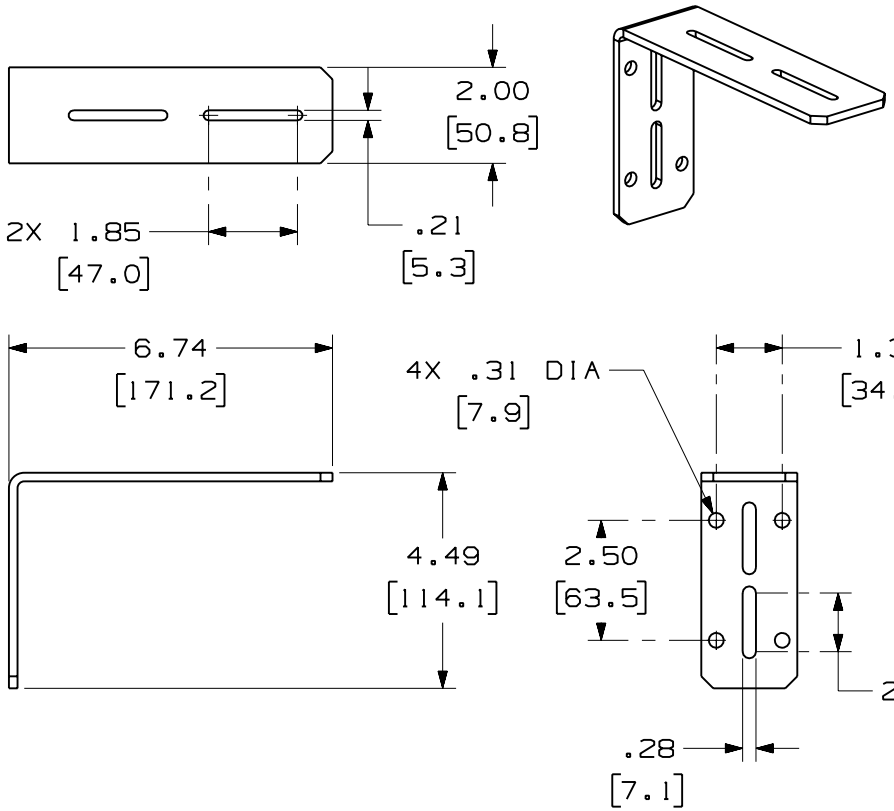

H NOTES:

1. SEE CURRENT CATALOG FOR ADDITIONAL PART SUFFIXES TO INDICATE PACKAGE QUANTITY.
2. THE FIBER-DUCT 2x2, 4x4 AND FIBERRUNNER 2x2 WALL MOUNT "L" BRACKET IS USED TO SUPPORT THE FIBER-DUCT 2x2 AND 4x4 SOLID AND SLOTTED WALL CHANNEL AND THE FIBERRUNNER 2x2 HINGED AND HINGED SLOTTED CHANNEL FROM ANY FLAT SURFACE SUITABLE TO CARRY THE WEIGHT OF THE PATHWAY.
3. THE FIBER-DUCT 2x2, 4x4 AND FIBERRUNNER 2x2 WALL MOUNT "L" BRACKET KIT INCLUDES:
   ONE (1) BRACKET,
   TWO (2) #10-32x1/2 PAN HEAD SLOTTED MACHINE SCREWS (FLB ONLY)
   TWO (2) M5x.8x16 PAN HEAD SLOTTED MACHINE SCREWS (FLBM ONLY)
   TWO (2) #10 HELICAL SPRING LOCKWASHERS (FLB ONLY)
   TWO (2) M5 HELICAL SPRING LOCKWASHER (FLBM ONLY)
   TWO (2) #10-32 HEX MACHINE SCREW NUTS (FLB ONLY)
   TWO (2) M5x.8 HEX NUTS (FLBM ONLY)
4. FINISH COLOR: YELLOW ZINC DICHROMATE
5. DIMENSIONS IN PARENTHESES ARE IN METRIC.

ENG. REF.: D35245BR_DC_FLB_03.prt

CAD FILENAME/LAYERS G FLB.pdf

PANDUIT CORP TINLEY PARK, ILLINOIS

FIBER-DUCT 2x2, 4x4 AND FIBERRUNNER 2x2 WALL MOUNT "L" BRACKET (FLB, FLBM)
F CUSTOMER DRAWING

UNLESS OTHERWISE SPECIFIED, DIMENSIONAL TOLERANCES ARE:
(.X) ± (.XXX) ±
(.XX) ±.03 (.8) ANGLES ±

UNLESS OTHERWISE SPECIFIED, ALL DIMENSIONS ARE GIVEN IN INCHES, THIRD ANGLE PROJECTION.

DRAWN BY TPC
MAT'L: STEEL J
SCALE NONE
DATE 11-18-96
CHK'D CEF
DRAWING NO. 35245-18
DWG A
SIZE

REV	DATE	BY	CHK	DESCRIPTION	ECN	-	R	CUST	SUP	GMBH
-	--------	---	---	J. REVISED MATERIAL I. REVISED PART WEIGHT	--------		--	--		
-	--------	---	---	H. REVISED GENERAL NOTES G. REVISED CAD FILENAME	--------		--	--		
3	7-20-06	MSO	RN	F. REVISED DRAWING TITLE E. REVISED AND REDRAWN	35245-18		RN	RN		

Mouser Electronics

Authorized Distributor

Click to View Pricing, Inventory, Delivery & Lifecycle Information:

Panduit:
FLB