THIS DRAWING IS UNPUBLISHED. RELEASED FOR PUBLICATION -,- .
© COPYRIGHT - BY TYCO ELECTRONICS CORPORATION. ALL RIGHTS RESERVED.

PART NUMBER	REV	FIRST USED
1385491-1	B	122500-1
1385491-2	B	565435-5
1385491-3	B	354500-1

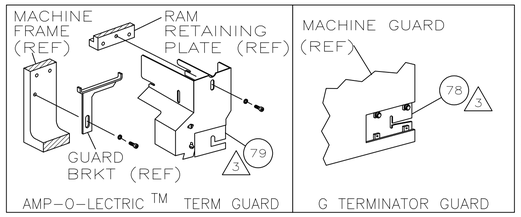

TERMINAL NAME: RECEPTACLE

AMP TERM PN	MFR TERM PN
1572169	JTP-1811-29

FCI TERMINAL AMP CRIMP SPECS

PAD LTR	CRIMP HEIGHT	WIRE SIZE
A	.060 ±.002 [1.52 ±0.05mm]	18
B	.055 ±.002 [1.40 ±0.05mm]	20
C	NOT	USED
D	NOT	USED

CRIMP	SIZE	TYPE	RANGE
WIRE	.070 [1.78mm]	F	20-18
INSUL	.110 [2.79mm]	F	ø.082 MAX

WIRE STRIP LENGTH	TERM APPL SPEC	FEED	APPL INSTRUCTION	SET UP GAGE	LAYOUT
.203-.234	NONE	.600	408-8040	458637-1	L2725

LOC	DIST
A	66

REVISIONS

P	LTR	DESCRIPTION	DATE	DWN	APVD
	B	ECR-07-010759	5-2007	MY	TE

-1	LEADMAKER	MECH POST FEED
-2	BENCH MODEL K	MECH PRE FEED
-3	BENCH MODEL G	MECH PRE FEED

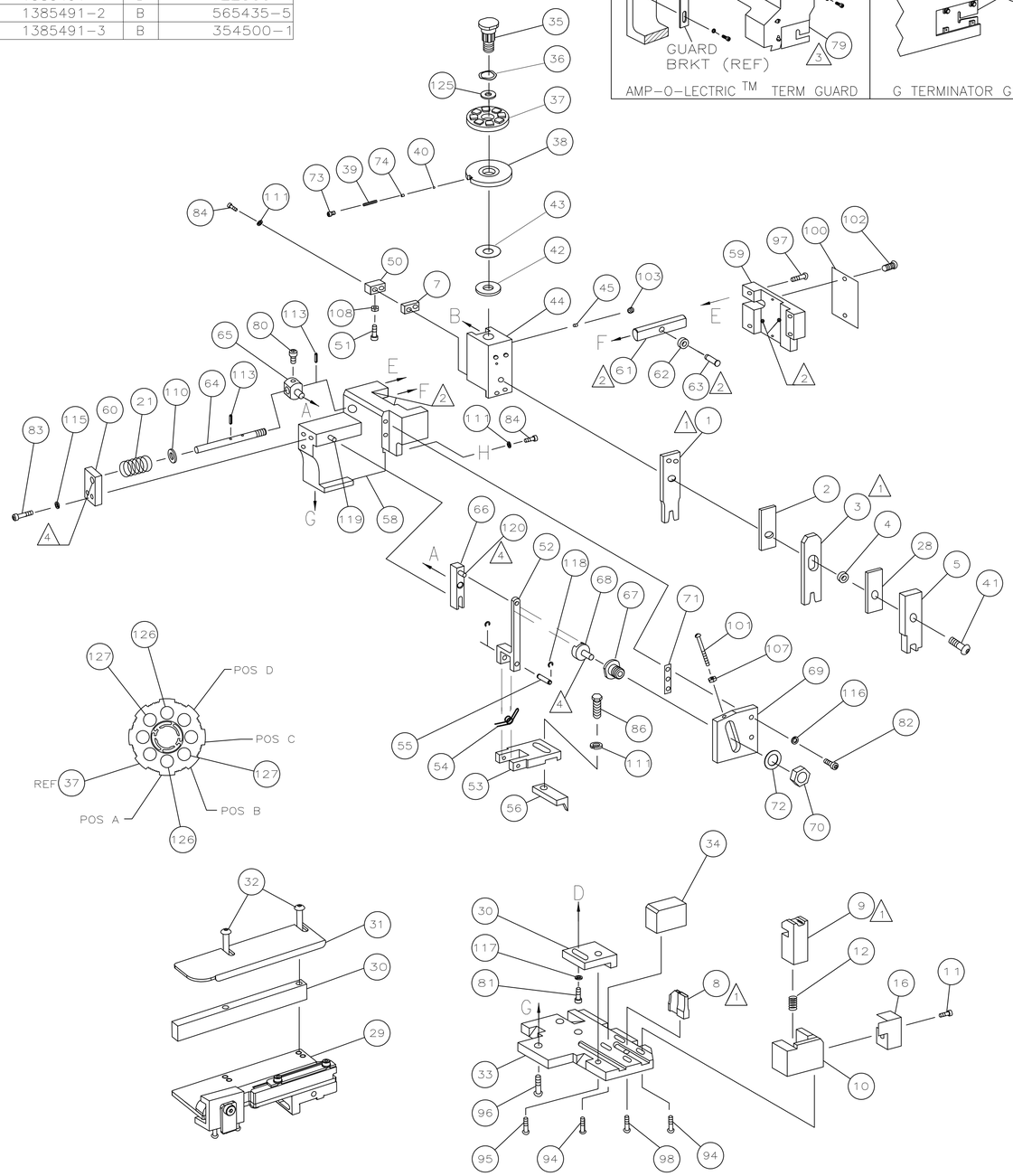

-3	-2	-1	U/M	PART NO	DESCRIPTION	ITEM NO
						129
						128
2	2	2	–	354779-8	PIN, WIRE DISC (.3030)B	127
2	2	2	–	9-354778-7	PIN, WIRE DISC (.2980)A	126
1	1	1	–	986950-1	WASHER, FLAT PRECISION	125
1	1	1	–	217238-1	GENERAL INSTRUCTION PACKAGE	124
1	1	1	–	4088040	SF APPL INST 408-8040	123
						122
						121
REF	REF	REF	–	1-21030-1	PIN,DOWEL(Ø.187x.50)LEVER	120
REF	REF	REF	–	1-21030-6	PIN,DOWEL(Ø.187x1.25)HOUSING	119
REF	REF	REF	–	21045-3	RING,RET "C"(Ø.187)FD FING PIN	118
1	1	1	–	21024-5	WASHER, LOCK(#10)ADJ BLOCK	117
REF	REF	REF	–	21024-5	WASHER,LOCK(#10)ADJ PLATE	116
REF	REF	REF	–	21024-5	WASHER,LOCK(#10)FEED GDE ROD	115
						114
REF	REF	REF	–	5-21028-1	PIN,SLT SPR(Ø.125x.50)ADJ ROD	113
						112
4	4	4	–	21024-4	WASHER,LOCK(#8)STRIPPER	111
REF	REF	REF	–	21899-4	WASHER,FLAT(Ø5/16)SCREW ADJ	110
						109
1	1	1	–	21018-5	NUT,HEX(NO.6)HOLDDOWN	108
REF	REF	REF	–	21068-5	NUT,HEX(6-32)FEED ADJ	107
						106
						105
1	1	–	–	992031-1	PIN, CLEVIS	104
1	1	1	–	21009-2	SCR,SKT SET(1/4-20x.25 LW)RAM	103
2	2	2	–	21017-2	SCR,DRIVE(#2x.19)ID PLATE	102
REF	REF	REF	–	6-23715-5	SCR,PAN HD(6-32x1.50)FEED ADJ	101
1	1	1	–	461264-1	PLATE, IDENTIFICATION	100
						99
1	1	1	–	22733-8	SCR,BHC(8-32x.38 LW)ANVIL	98
REF	REF	REF	–	2-21002-9	SCR,BHC(10-32x.75)CAP	97
REF	REF	REF	–	2-22733-8	SCR,BHC(1/4-20x.62)HOUSING	96
REF	REF	REF	–	2-21002-7	SCR,BHC(10-32x.50)SG ADJ BLOCK	95
4	4	4	–	2-21002-2	SCR,BHC(8-32x.50)TERM H DWN	94
						93
						92
1	1	1	–	1-21002-7	SCR,BHC(6-32x.38)CAM	91
						90
1	1	–	–	7-21000-9	SCR,SHC(4-40x.19)STRIPPER	89
						88
						87
1	1	1	–	2-22603-0	SCR,HEX HD(8-32x.31)FEED FINGER	86
						85
3	3	3	–	2-21000-7	SCR,SHC(8-32x.50)STRIPPER	84
REF	REF	REF	–	3-21000-7	SCR,SHC(10-32x.75)FEED ROD GD	83
REF	REF	REF	–	3-21000-6	SCR,SHC(10-32x.62)FD ADJ BLK	82
1	1	1	–	3-21000-4	SCR,SHC(10-32x.38)SG ADJ BL	81
REF	REF	REF	–	3-21000-4	SCR,SHC(10-32x.38)PIVOT BLK	80
–	REF	–	–	455749-1	GUARD, WINDOW	79
REF	–	–	–	679532-1	INSERT, GUARD	78
						77
						76
						75
1	1	1	–	690603-1	SPRING, ASSIST	74
1	1	1	–	23030-1	SCR,SHC(6-32x.25 SL)INS DISC	73
REF	REF	REF	–	458109-1	WASHER, SPECIAL	72
REF	REF	REF	–	690517-1	SPACER	71

QTY REQD PER ASSY — PARTS LIST

-3	-2	-1	U/M	PART NO	DESCRIPTION	ITEM NO
REF	REF	REF	–	22594-8	NUT,HEX(1/2-20)	70
REF	REF	REF	–	240628-1	PLATE, ADJUSTMENT	69
REF	REF	REF	–	240626-1	SHAFT, PIVOT	68
REF	REF	REF	–	240633-1	BUSHING	67
REF	REF	REF	–	455680-1	LEVER, INTERMEDIATE	66
REF	REF	REF	–	240629-1	BLOCK, PIVOT	65
REF	REF	REF	–	240632-2	SCREW, ADJ FEED ROD	64
REF	REF	REF	–	240659-3	PIN, CAM ROLLER	63
REF	REF	REF	–	240658-1	ROLLER, CAM	62
REF	REF	REF	–	454398-2	ROD, FEED	61
REF	REF	REF	–	454178-1	GUIDE, FEED ROD	60
REF	REF	REF	–	454220-1	CAP, RAM	59
REF	REF	REF	–	454485-1	HOUSING	58
						57
1	1	1	–	690542-2	PAWL, FEED	56
REF	REF	REF	–	240624-1	PIN, FEED FINGER	55
REF	REF	REF	–	691499-1	SPRING, FEED FINGER	54
REF	REF	REF	–	690541-1	HOLDER, FEED FINGER	53
REF	REF	REF	–	455679-2	LEVER, TERMINAL FEED ARM	52
1	1	1	–	811242-2	BUMPER, HOLDDOWN	51
1	1	1	–	690753-1	SPACER, TONKER	50
1	–	–	–	690602-6	CAM, PRE-FEED 1 5/8 ST	49
–	1	–	–	690602-5	CAM, PRE-FEED 1 1/8 ST	48
–	–	1	–	690501-4	CAM, POST-FEED 1 5/8 ST	47
1	1	1	–	459456-2	APPLICATOR, BASIC (SUBASSY)	46
1	1	1	–	690191-1	PLUG, NYLON	45
1	1	1	–	455673-1	RAM	44
1	1	1	–	690125-1	WASHER, LAMINATED	43
1	1	1	–	690124-1	WASHER, RAM	42
1	1	1	–	7-21002-9	BOLT, CRIMPER(5/16x1.00)	41
1	1	1	–	23241-6	BALL, STEEL	40
1	1	1	–	690170-1	SPRING, COMPRESSION	39
1	1	1	–	690142-1	DISC, INSULATION	38
1	1	1	–	354777-1	WIRE DISC, PLASTIC	37
1	1	1	–	22480-5	WASHER, SPRING	36
1	1	1	–	690212-1	POST, RAM	35
1	1	1	–	690786-1	SUPPORT, TERMINAL	34
REF	REF	REF	–	455675-1	PLATE, BASE	33
2	2	2	–	2-21002-4	SCR,BHC(8-32x.75)	32
1	1	1	–	1320928-3	STRIP GUIDE (REAR)	31
1	1	1	–	1320908-1	SPACER, STRIP GUIDE	30
1	1	1	–	1633091-7	STRIP GUIDE ASSEMBLY	29
1	1	1	–	1-455888-0	SPACER, FRONT SHEAR DEP	28
						27
						26
1	1	1	–	240792-1	DRAG, TERMINAL	25
						24
						23
–	–	1	–	690472-2	STRIPPER	22
REF	REF	REF	–	4-22284-9	SPRING, FEED RETURN	21
1	1	–	–	679218-1	STRIPPER WIRE STOP ASSY	20
1	1	–	–	458949-1	STRIPPER	19
						18
						17
1	1	1	–	318563-1	GUARD, CHIP, FRONT	16
						15
						14
						13
1	1	1	–	5-22280-0	SPRING, SHEAR	12
1	1	1	–	690461-1	STOP, SHEAR	11
1	1	1	–	690459-1	HOLDER, SHEAR (FRONT)	10
1	1	1	–	1-454276-9	SHEAR, FLOAT (FRONT)	9
1	1	1	–	904991-6	ANVIL	8
1	1	1	–	2-240641-1	SPACER, DEPRESSOR (REAR)	7
						6
1	1	1	–	1-455889-3	DEPRESSOR, SHEAR (FRONT)	5
1	1	1	–	1-238011-7	SPACER, BLOCK CRIMPER	4
1	1	1	–	2-456134-9	CRIMPER, INSULATION	3
1	1	1	–	1-455888-1	SPACER, CRIMPER	2
1	1	1	–	3-456404-9	CRIMPER, WIRE	1

QTY REQD PER ASSY — PARTS LIST

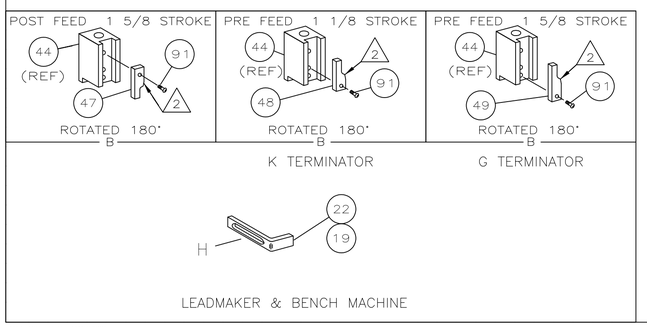

1. RECOMMENDED SPARE PARTS.
2. GREASE LIGHTLY.
3. GUARD MUST BE IN PLACE WHEN OPERATING APPLICATOR IN A BENCH MACHINE.
4. LUBRICATE DAILY USING NO. 20 MACHINE OIL.
5. ITEMS WITH QTY OF REF SPECIFIED (EXCEPT ITEMS 78 AND 79) ARE USED ON ITEM 46.

THIS DRAWING IS A CONTROLLED DOCUMENT.

DIMENSIONS: INCHES

TOLERANCES UNLESS OTHERWISE SPECIFIED:
0 PLC ± –
1 PLC ± –
2 PLC ± –
3 PLC ± –
4 PLC ± –
ANGLES ± –

MATERIAL –
FINISH –

DWN C.ERISMAN 070CT02
CHK –
APVD T.ELBIN 070CT02
PRODUCT SPEC –
APPLICATION SPEC –
WEIGHT –

Tyco Electronics
Tyco Electronics Corporation
Harrisburg, PA 17105-3608

NAME
SIDE FEED HDM APPLICATOR
–
–

SIZE	CAGE CODE	DRAWING NO	RESTRICTED TO
A1	00779	C 1385491	–

CUSTOMER DRAWING — SCALE – — SHEET 1 OF 1 — REV B

Mouser Electronics

Authorized Distributor

Click to View Pricing, Inventory, Delivery & Lifecycle Information:

TE Connectivity:

1385491-1