THIS DRAWING IS UNPUBLISHED. RELEASED FOR PUBLICATION -,- .
© COPYRIGHT - By - ALL RIGHTS RESERVED.

LOC	DIST
AA	00

REVISIONS

P	LTR	DESCRIPTION	DATE	DWN	APVD
	D	ECO-15-006888	06MAY2015	LL	SH

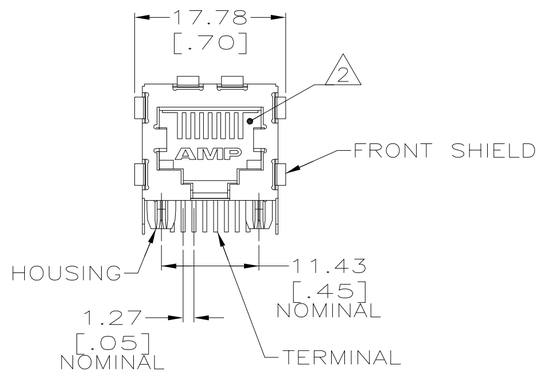

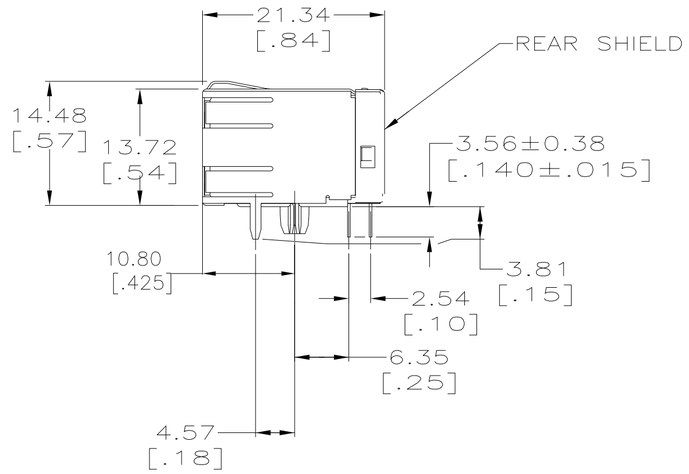

1 MATERIAL: HOUSING – NYLON, COLOR: BLACK, UL 94V-0.
OVERMOLDED TERMINAL ARRAY – PBT, BROWN.
TERMINALS – 0.33[.013] THICK PHOS BRONZE PLATED WITH 1.27μm[.000050] MINIMUM THICK HARD GOLD IN LOCALIZED AREA AND 3.81μm [.000150] MINIMUM THICK MATTE TIN IN SOLDER AREA OVER 1.27μm[.000050] MINIMUM THICK NICKEL UNDERPLATE.
SHIELDS – 0.25[.010] THICK COPPER ALLOY PLATED WITH 1.27μm[.000050] MINIMUM NICKEL AND 2.03 μm [.000080] MINIMUM HOT TIN DIP ON PCB GROUND TABS.

2 JACK CAVITY CONFORMS TO FCC RULES AND REGULATIONS, PART 68 SUBPART F.

3 USE #30 DRILL BIT OR 3.25mm DRILL BIT WHEN PRODUCING THESE PCB HOLES.

4 DIELECTRIC WITHSTANDING VOLTAGE BETWEEN SHIELD AND TERMINAL IS 1500 VAC

5 DIELECTRIC WITHSTANDING VOLTAGE BETWEEN SHIELD AND TERMINAL IS 2400 VAC

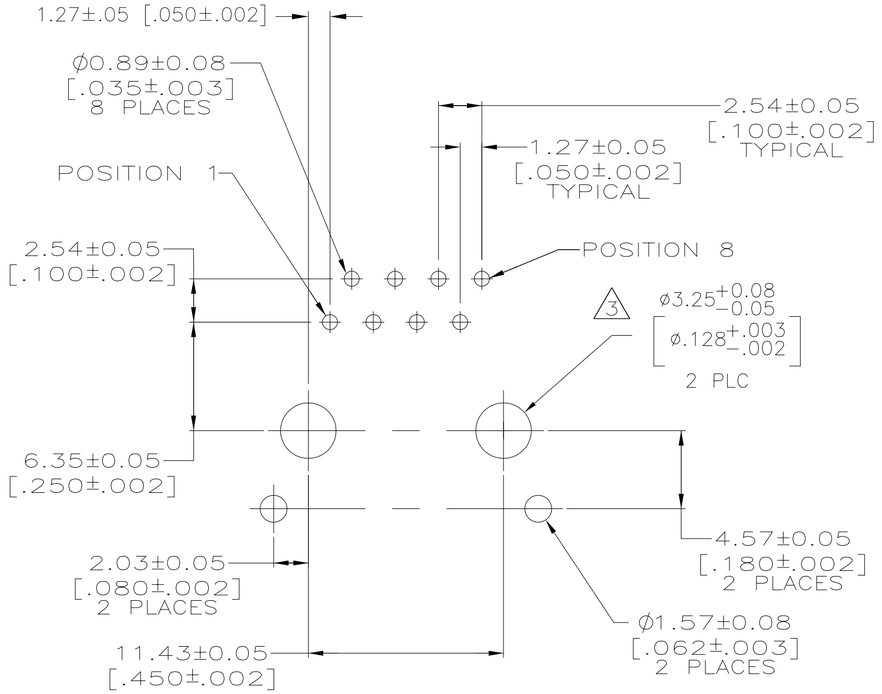

RECOMMENDED PC BOARD LAYOUT
COMPONENT SIDE (TOP)
SCALE 4:1

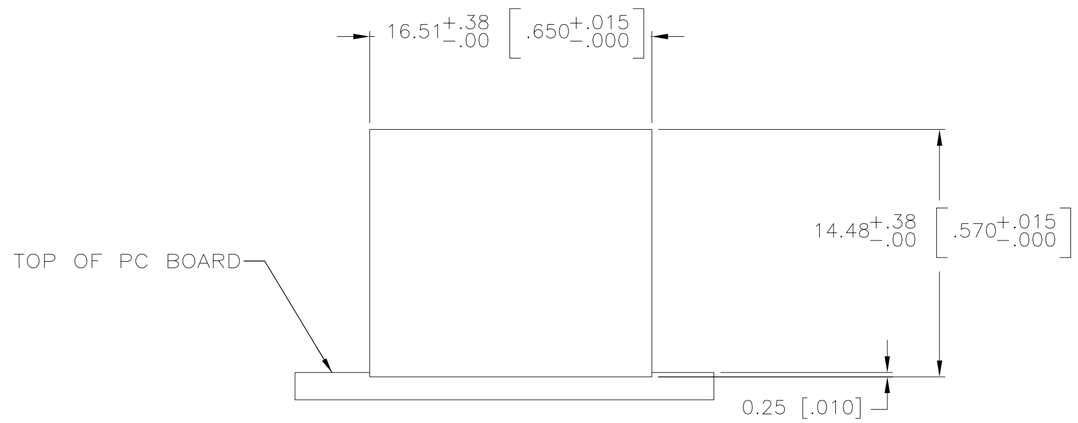

RECOMMENDED PANEL CUTOUT
SCALE 4:1

NOTE	PART NUMBER
5	5406217-2
4	5406217-1

THIS DRAWING IS A CONTROLLED DOCUMENT.

DIMENSIONS: mm

TOLERANCES UNLESS OTHERWISE SPECIFIED:
0 PLC ± –
1 PLC ± –
2 PLC ± 0.25[.01]
3 PLC ± 0.13[.005]
4 PLC ± –
ANGLES ± –

MATERIAL: SEE NOTE 1
FINISH: SEE NOTE 1

DWN 01JUNE2005 T. SPRINKLE/L.A.MAYER
CHK 01JUNE2005 J.WESTMAN
APVD 01JUNE2005 S.FLICKINGER
PRODUCT SPEC 108-1163-2
APPLICATION SPEC 114-2048
WEIGHT –

TE Connectivity

NAME: MODULAR JACK ASSEMBLY, SINGLE PORT, 8 POSITION, SHIELDED, REVERSE PANEL GROUND TABS, CATEGORY 5

SIZE A2 | CAGE CODE 00779 | DRAWING NO C-5406217 | RESTRICTED TO –

CUSTOMER DRAWING | SCALE 2:1 | SHEET 1 OF 1 | REV D

5406217

1471-9 (3/11)