Part Number: 0351500314
Status: Active
Overview: VersaBlade Wire-to-Wire Connector System
Description: Wire-to-Wire VersaBlade Hybrid Plug Housing, with Mounting Ears, 3 Circuits, Polyester UL94V-0, Blue

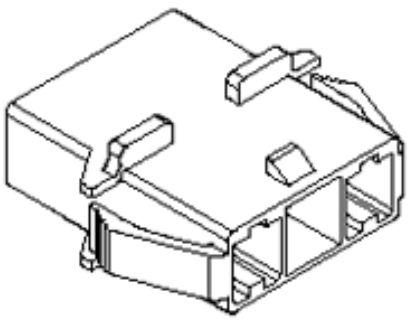
Series image - Reference only

Documents:
3D Model
Drawing (PDF)
Product Specification PS-35150-003-001 (PDF)
Packaging Specification PK-35150-003-001 (PDF)
RoHS Certificate of Compliance (PDF)

Agency Certification

CSA	LR19980
UL	E29179

General

Product Family	Crimp Housings
Series	35150
Application	Power, Wire-to-Wire
Comments	Polarized to Mating Part, Positive Lock, Polarized to Mating Part, Positive Lock
Overview	VersaBlade Wire-to-Wire Connector System
Product Name	VersaBlade
UPC	800754834841

Physical

Circuits (maximum)	3
Color - Resin	Blue
Flammability	94V-0
Gender	Plug
Glow-Wire Capable	No
Keying to Mating Part	None
Lock to Mating Part	Yes
Material - Resin	Polyester
Net Weight	4.213/g
Number of Rows	1
Packaging Type	Bag
Panel Mount	Yes
Pitch - Mating Interface	7.30mm
Pitch - Termination Interface	7.30mm
Polarized to Mating Part	Yes
Stackable	No
Temperature Range - Operating	-40° to +120°C

Material Info

Reference - Drawing Numbers

Packaging Specification	PK-35150-003-001
Product Specification	PS-35150-003-001
Sales Drawing	SD-35150-031X

EU ELV
Not Relevant

EU RoHS
Compliant
REACH SVHC
Not Contained Per - ED/71/2019 (16 July 2019)
Halogen-Free Status
Not Low-Halogen
For more information, please visit Contact US

China RoHS

China ROHS	Green Image
ELV	Not Relevant
RoHS Phthalates	Not Contained

Search Parts in this Series
35150 Series

Mates With
Receptacle Housing 35151

Use With
VersaBlade Crimp Terminals 35745 , 35746 , 35747 , TPA 35150

Mouser Electronics

Authorized Distributor

Click to View Pricing, Inventory, Delivery & Lifecycle Information:

Molex:
35150-0314