DRAWING MADE IN THIRD ANGLE PROJECTION

/home/us014442/dm.tecmod

PART NUMBER	REV	FIRST USED
680472-1	B	122500-1
680472-2	B	565435-5
680472-3	B	354500-1

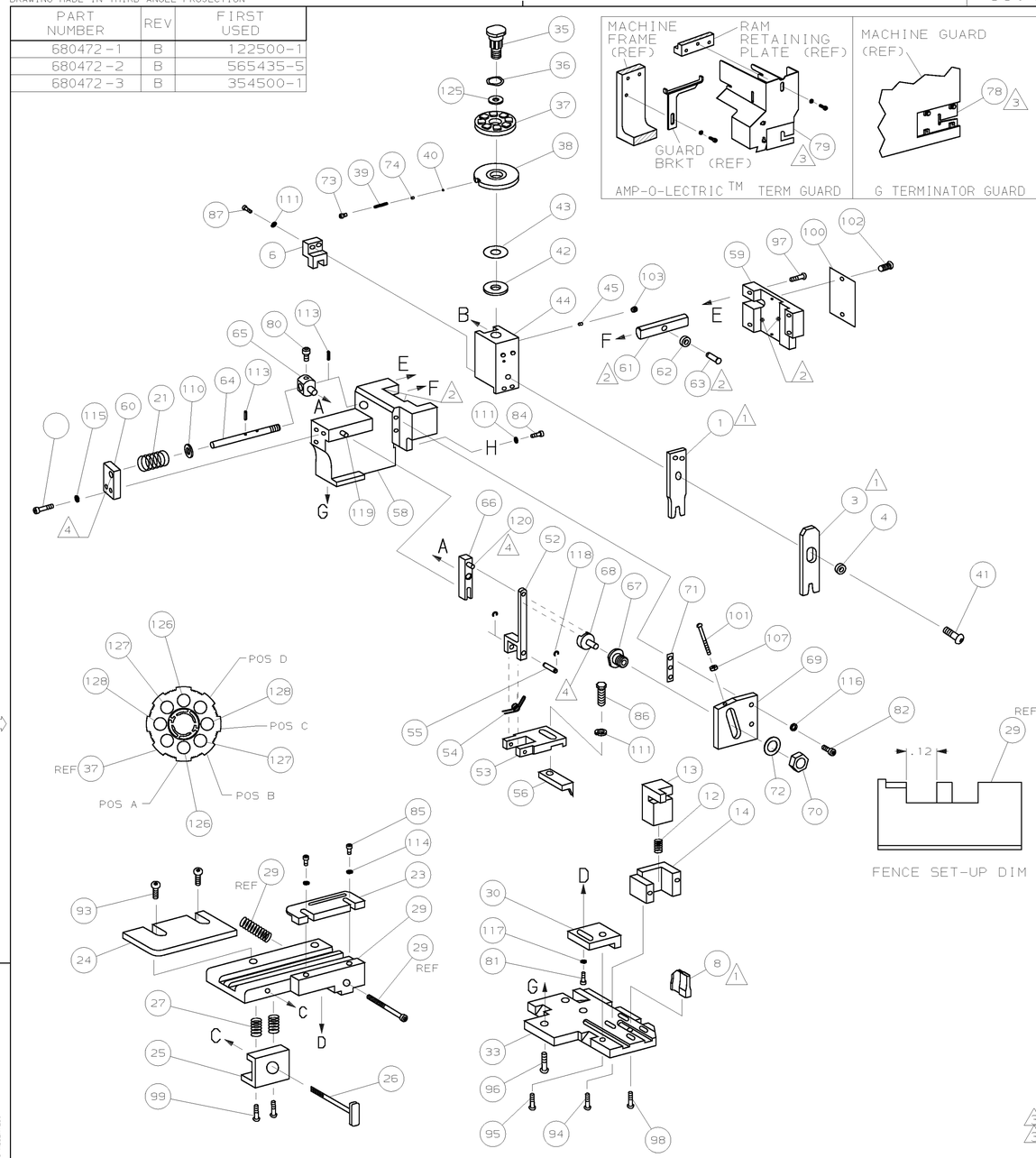

TERMINAL NAME: TERMINAL, 3.96MM PITCH

TYCO PN	MOLEX PN
286585-1	08-50-0107
286585-2	08-50-0133
286585-3	08-58-0125
286585-4	08-65-0116
286585-5	08-56-0107
286585-6	08-55-0105

CRIMPING DATA

PAD LTR	CRIMP HEIGHT	WIRE SIZE
A	.039 ±.002 [0.99 ±0.05mm]	22
B	.037 ±.002 [0.94 ±0.05mm]	24
C	.035 ±.002 [0.89 ±0.05mm]	26
D	NOT	USED

CRIMP	SIZE	TYPE	RANGE
WIRE	.062 [1.57mm]	F	26-22
INSUL	.070 [1.78mm]	F	ø.042-.065

WIRE STRIP LENGTH	TERM APPL SPEC	FEED	APPL INSTRUCTION	SET UP GAGE	LAYOUT
.100-.125	NONE	.281	408-8040	458637-1	L1933

-3	-2	-1	U/M	DWG SIZE	PART NO	DESCRIPTION	ITEM NO
							129
2	2	2	-	C	4-354779-6	PIN, WIRE DISC (.3220)C	128
2	2	2	-	C	4-354779-2	PIN, WIRE DISC (.3200)B	127
2	2	2	-	C	3-354779-8	PIN, WIRE DISC (.3180)A	126
1	1	1	-	A	986950-1	WASHER, FLAT PRECISION	125
1	1	1	-	A	217238-1	GENERAL INSTRUCTION PACKAGE	124
1	1	1	-	-	4088040	SF APPL INST 408-8040	123
							122
							121
REF	REF	REF	-	A	1-21030-1	PIN,DOWEL(ø.187×.50)LEVER	120
REF	REF	REF	-	A	1-21030-6	PIN,DOWEL(ø.187×1.25)HOUSING	119
REF	REF	REF	-	A	21045-3	RING,RET "C"(ø.187)FD FING PIN	118
1	1	1	-	A	21024-5	WASHER, LOCK(#10)ADJ BLOCK	117
REF	REF	REF	-	A	21024-5	WASHER,LOCK(#10)ADJ PLATE	116
REF	REF	REF	-	A	21024-5	WASHER,LOCK(#10)FEED GDE ROD	115
2	2	2	-	A	21024-2	WASHER,LOCK(#4)FRONT STP GUIDE	114
REF	REF	REF	-	A	5-21028-1	PIN,SLT SPR(ø.125×.50)ADJ ROD	113
							112
4	4	4	-	A	21024-4	WASHER,LOCK(#8)STRIPPER	111
REF	REF	REF	-	A	21899-4	WASHER,FLAT(ø5/16)SCREW ADJ	110
							109
							108
REF	REF	REF	-	A	21018-5	NUT,HEX(6-32)FEED ADJ	107
							106
							105
1	1	-	-	A	1-21002-3	SCR,BHC(4-40×.25)STRIPPER	104
1	1	1	-	A	21009-2	SCR,SKT SET(1/4-20×.25 LW)RAM	103
2	2	2	-	A	21017-2	SCR,DRIVE(#2×.19)ID PLATE	102
REF	REF	REF	-	A	6-23715-5	SCR,PAN HD(6-32×1.50)FEED ADJ	101
1	1	1	-	B	461264-1	PLATE, IDENTIFICATION	100
2	2	2	-	A	3-21002-0	SCR,BHC(10-32×.88)DRAG	99
1	1	1	-	A	22733-8	SCR,BHC(8-32×.38 LW)ANVIL	98
REF	REF	REF	-	A	2-21002-9	SCR,BHC(10-32×.75)CAP	97
REF	REF	REF	-	A	2-22733-8	SCR,BHC(1/4-20×.62)HOUSING	96
REF	REF	REF	-	A	2-21002-7	SCR,BHC(10-32×.50)SG ADJ BLOCK	95
2	2	2	-	A	2-21002-2	SCR,BHC(8-32×.50)TERM H DWN	94
2	2	2	-	A	2-21002-1	SCR,BHC(8-32×.38)REAR STR GUI	93
							92
1	1	1	-	A	1-21002-7	SCR,BHC(6-32×.38)CAM	91
							90
							89
							88
2	2	2	-	A	2-21000-9	SCR,SHC(8-32×.75)DEP-HOLD	87
1	1	1	-	A	2-22603-0	SCR,HEX HD(8-32×.31)FEED FINGER	86
2	2	2	-	A	1-21000-4	SCR,SHC(4-40×.38)F ST GUIDE	85
1	1	1	-	A	2-21000-7	SCR,SHC(8-32×.50)STRIPPER	84
REF	REF	REF	-	A	3-21000-7	SCR,SHC(10-32×.75)FEED ROD GD	83
REF	REF	REF	-	A	3-21000-6	SCR,SHC(10-32×.62)FD ADJ BLK	82
1	1	1	-	A	3-21000-4	SCR,SHC(10-32×.38)SG ADJ BL	81
REF	REF	REF	-	A	3-21000-4	SCR,SHC(10-32×.38)PIVOT BLK	80
-	REF	-	-	B	455749-1	GUARD, WINDOW	79
REF	-	-	-	B	679532-1	INSERT, GUARD	78
							77
							76
							75
1	1	1	-	A	690603-1	SPRING, ASSIST	74
1	1	1	-	A	23030-1	SCR,SHC(6-32×.25 SL)INS DISC	73
REF	REF	REF	-	A	458109-1	WASHER, SPECIAL	72
REF	REF	REF	-	A	690517-1	SPACER	71

QTY REQD PER ASSY — PARTS LIST

-1	-2	-3	U/M	DWG SIZE	PART NO	DESCRIPTION	ITEM NO
LEADMAKER	BENCH MODEL K	BENCH MODEL G				MECH POST FEED / MECH PRE FEED / MECH PRE FEED	
REF	REF	REF	-	B	22594-8	NUT,HEX(1/2-20)	70
REF	REF	REF	-	B	240628-1	PLATE, ADJUSTMENT	69
REF	REF	REF	-	B	240626-1	SHAFT, PIVOT	68
REF	REF	REF	-	B	240633-1	BUSHING	67
REF	REF	REF	-	A	455680-1	LEVER, INTERMEDIATE	66
REF	REF	REF	-	B	240629-1	BLOCK, PIVOT	65
REF	REF	REF	-	A	240632-2	SCREW, ADJ FEED ROD	64
REF	REF	REF	-	B	240659-3	PIN, CAM ROLLER	63
REF	REF	REF	-	B	240658-1	ROLLER, CAM	62
REF	REF	REF	-	B	454398-2	ROD, FEED	61
REF	REF	REF	-	A	454178-1	GUIDE, FEED ROD	60
REF	REF	REF	-	C	454220-1	CAP, RAM	59
REF	REF	REF	-	D	454485-1	HOUSING	58
							57
1	1	1	-	B	1-694433-7	PAWL, FEED	56
REF	REF	REF	-	B	240624-1	PIN, FEED FINGER	55
REF	REF	REF	-	B	691499-1	SPRING, FEED FINGER	54
REF	REF	REF	-	B	690541-1	HOLDER, FEED FINGER	53
REF	REF	REF	-	A	455679-1	LEVER, TERMINAL FEED ARM	52
							51
							50
1	-	-	-	B	690602-6	CAM, PRE-FEED 1 5/8 ST	49
-	1	-	-	B	690602-5	CAM, PRE-FEED 1 1/8 ST	48
-	-	1	-	B	690501-4	CAM, POST-FEED 1 5/8 ST	47
1	1	1	-	B	459456-1	APPLICATOR, BASIC (SUBASSY)	46
1	1	1	-	A	690191-1	PLUG, NYLON	45
1	1	1	-	C	455673-1	RAM	44
1	1	1	-	A	690125-1	WASHER, LAMINATED	43
1	1	1	-	A	690124-1	WASHER, RAM	42
1	1	1	-	A	7-21002-9	BOLT, CRIMPER(5/16×1.00)	41
1	1	1	-	A	23241-6	BALL, STEEL	40
1	1	1	-	A	690170-1	SPRING, COMPRESSION	39
1	1	1	-	C	690142-1	DISC, INSULATION	38
1	1	1	-	D	354777-1	WIRE DISC, PLASTIC	37
1	1	1	-	A	22480-5	WASHER, SPRING	36
1	1	1	-	B	690212-1	POST, RAM	35
							34
REF	REF	REF	-	D	455675-1	PLATE, BASE	33
							32
							31
REF	REF	REF	-	B	455689-1	BLOCK, STRIP GUIDE ADJ	30
1	1	1	-	C	318042-1	STRIP GUIDE PLATE ASSY	29
							28
2	2	2	-	A	22281-9	SPRING, DRAG	27
1	1	1	-	B	690546-1	LEVER, DRAG RELEASE	26
1	1	1	-	B	224404-1	DRAG, TERMINAL	25
1	1	1	-	D	217817-1	GUIDE, STRIP (REAR)	24
1	1	1	-	A	1-690487-4	GUIDE, STRIP (FRONT)	23
-	-	1	-	B	690472-9	STRIPPER	22
REF	REF	REF	-	A	4-22284-9	SPRING, FEED RETURN	21
1	1	-	-	A	458950-1	STRIPPER WIRE STOP ASSY	20
1	1	-	-	B	217993-2	STRIPPER	19
							18
							17
							16
							15
1	1	1	-	B	681023-1	HOLDER, SHEAR (REAR)	14
1	1	1	-	C	318574-2	SUPPORT, FLOATING TERM	13
1	1	1	-	A	4-22280-3	SPRING, SHEAR	12
1	1	1	-	B	690461-1	STOP, SHEAR	11
							10
							9
1	1	1	-	C	904766-1	ANVIL	8
							7
1	1	1	-	A	217820-1	BLADE, SHEAR	6
							5
1	1	1	-	B	238009-1	SPACER, BLOCK CRIMPER	4
1	1	1	-	C	4-456134-9	CRIMPER, INSULATION	3
							2
1	1	1	-	C	1-456403-3	CRIMPER, WIRE	1

REVISION OF EACH ASSY NO (WHEN BLANK, USE DWG REVISION)

QTY REQD PER ASSY — PARTS LIST

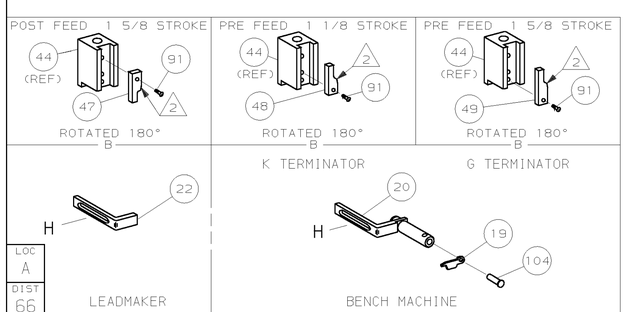

1. RECOMMENDED SPARE PARTS.
2. GREASE LIGHTLY.
3. GUARD MUST BE IN PLACE WHEN OPERATING APPLICATOR IN A BENCH MACHINE.
4. LUBRICATE DAILY USING NO. 20 MACHINE OIL.
5. ITEMS WITH QTY OF REF SPECIFIED (EXCEPT ITEMS 78 AND 79) ARE USED ON ITEM 46.

P	F	LTR	REVISION RECORD	APP	DATE
		B2	0150-0259-03	CE	MAR03
		B1	ECN 0150-0477-02	TB	4-02
		B	0150-8590-98	TB	6-98
		A	REVISED	CE	8-97

DIMENSIONS IN INCHES. DO NOT SCALE PRINT.
TOLERANCES UNLESS OTHERWISE SPECIFIED:
2 PLC DEC ±.02
3 PLC DEC ±-
4 PLC DEC ±-
ANGLES ± -
SURF TEXTURE: √
REMOVE BURRS, BREAK SHARP EDGES R.015 MAX

MATL – HT TR – FIN –

DR 21MAY97 M. OBRINE APP 21MAY97 T.ELBIN
CHK 21MAY97 C. ERISMAN REL -

AMP Incorporated Harrisburg, PA 17105-3608

NAME SIDE FEED HDM APPLICATOR — MACHINE REF MINI APPL

SCALE - D DWG NO 680472 SHEET 1 OF 1 REV B2

CAGE CODE 00779 — CUSTOMER AND ASSEMBLY DRAWING — RESTRICTED TO

LOC A DIST 66

THIS DRAWING IS A CONTROLLED DOCUMENT.
THIS DRAWING IS UNPUBLISHED. © COPYRIGHT 1998 BY AMP INCORPORATED. ALL RIGHTS RESERVED. RELEASED FOR PUBLICATION: JUN 16, 1998

Mouser Electronics

Authorized Distributor

Click to View Pricing, Inventory, Delivery & Lifecycle Information:

TE Connectivity:

680472-1