THIS DRAWING IS UNPUBLISHED. RELEASED FOR PUBLICATION -,- .
© COPYRIGHT - By - ALL RIGHTS RESERVED.

REVISIONS

P	LTR	DESCRIPTION	DATE	DWN	APVD
	F2	REVISED PER ECO-11-004587	11MAR11	RK	HMR
	G	REVISED PER ECO-17-002584	10APR2017	BDA	MM

1. .00076[.000030] GOLD IN THE CONTACT AREA, .00254[.000100]-.00508[.000200] MATTE TIN-LEAD ON THE SOLDER TAIL, ALL OVER .00127[.000050] NICKEL
2. POINT OF MEASUREMENT FOR PLATING THICKNESS
3. THE NOTED DIMENSIONS APPLY FROM THE BASIC DIMENSION LINE (NOT THE POST CENTERLINE) TO THE SURFACE INDICATED
4. ON ASSEMBLIES WITH FOUR OR MORE POSITIONS, TWO POLARIZATION SLOTS. ON ASSEMBLIES WITH TWO OR THREE POSITIONS, ONE POLARIZATION SLOT.
5. DIMENSIONS NOTED ARE FOR SOLDER STENCIL LAYOUT FOR USE WITH A 1.57±0.20 [.062±.008] THICK PRINTED CIRCUIT BOARD
6. MATERIAL: HOUSING - HIGH TEMPERATURE LCP
   COLOR: BLACK
   POSTS - BRASS
7. .00076[.000030] GOLD IN THE CONTACT AREA, .00254[.000100]-.00508[.000200] MATTE TIN ON THE SOLDER TAIL, ALL OVER .00127[.000050] NICKEL
8. OBSOLETE PARTS: OBSOLETE CIS STREAMLINING PER D.RENAUD/D.SINISI

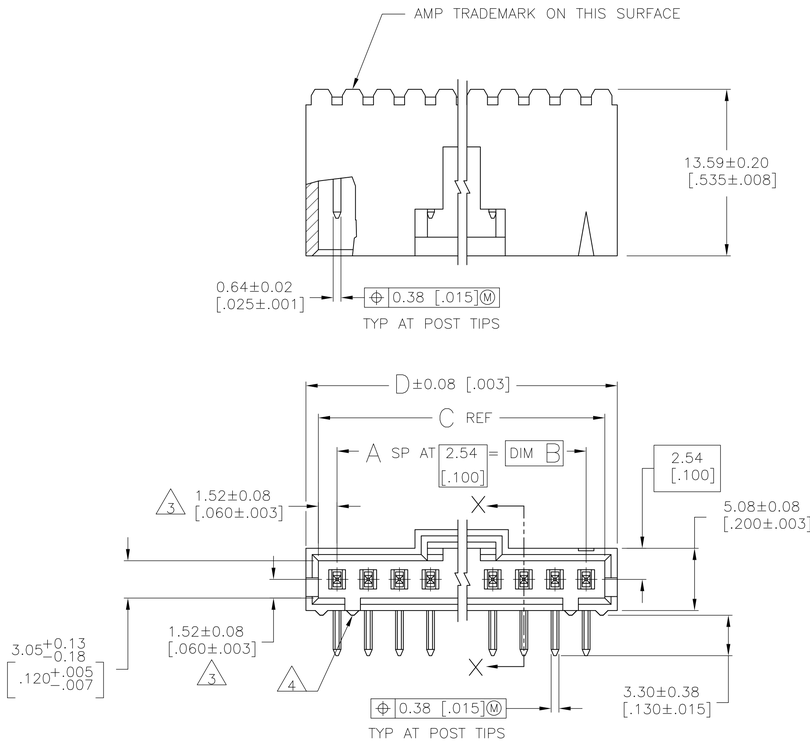

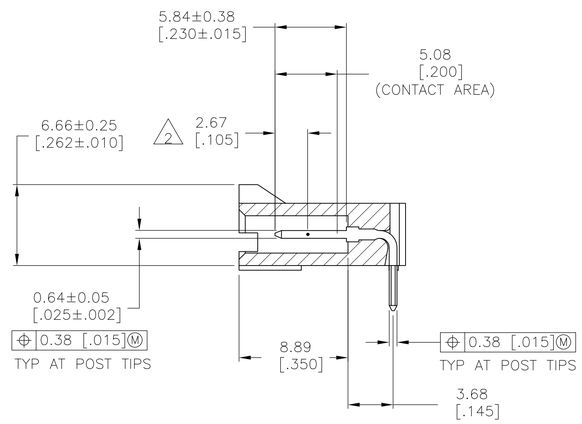

SECTION X-X

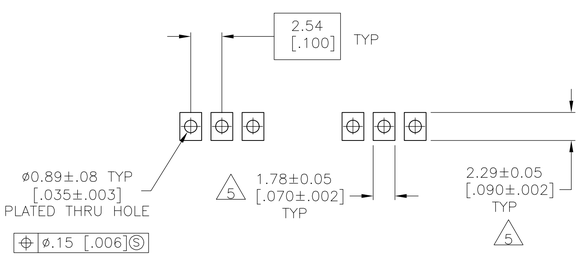

RECOMMENDED PC BOARD MOUNTING DIMENSIONS
RECOMMENDED STENCIL THICKNESS = 0.25 [.010]

7	2.595	2.520	2.400	24	25	7-104935-4
7	2.495	2.420	2.300	23	24	7-104935-3
7	2.395	2.320	2.200	22	23	7-104935-2
7	2.295	2.220	2.100	21	22	7-104935-1
7	2.195	2.120	2.000	20	21	7-104935-0
7	2.095	2.020	1.900	19	20	6-104935-9
7	1.995	1.920	1.800	18	19	6-104935-8
7	1.895	1.820	1.700	17	18	6-104935-7
7	1.795	1.720	1.600	16	17	6-104935-6
7	1.695	1.620	1.500	15	16	6-104935-5
7	1.595	1.520	1.400	14	15	6-104935-4
7	1.495	1.420	1.300	13	14	6-104935-3
7	1.395	1.320	1.200	12	13	6-104935-2
7	1.195	1.120	1.000	10	11	6-104935-1
7	1.095	1.020	.900	9	10	6-104935-0
7	.995	.920	.800	8	9	5-104935-9
7	.795	.720	.600	6	7	5-104935-8
7	.695	.620	.500	5	6	5-104935-7
7	.595	.520	.400	4	5	5-104935-6
7	7.49 [.295]	5.59 [.220]	2.54 [.100]	1	2	5-104935-5
	32.89 [1.295]	30.99 [1.220]	27.94 [1.100]	11	12	5-104935-4
	10.03 [.395]	8.13 [.320]	5.08 [.200]	2	3	5-104935-3
	22.73 [.895]	20.83 [.820]	17.78 [.700]	7	8	5-104935-2
	12.57 [.495]	10.67 [.420]	7.62 [.300]	3	4	5-104935-1
1	7.49 [.295]	5.59 [.220]	2.54 [.100]	1	2	104935-5
	32.89 [1.295]	30.99 [1.220]	27.94 [1.100]	11	12	104935-4
	10.03 [.395]	8.13 [.320]	5.08 [.200]	2	3	104935-3
	22.73 [.895]	20.83 [.820]	17.78 [.700]	7	8	104935-2
	12.57 [.495]	10.67 [.420]	7.62 [.300]	3	4	~~104935-1~~
PLATING	D	C	B	A	NO OF POSN	PART NUMBER

8 SUPERSEDED BY 5-104935-1

THIS DRAWING IS A CONTROLLED DOCUMENT.

DIMENSIONS: mm [INCHES]

TOLERANCES UNLESS OTHERWISE SPECIFIED:
0 PLC ± -
1 PLC ± -
2 PLC ± -
3 PLC ± .005
4 PLC ± -
ANGLES ± -

MATERIAL 6

FINISH POST : SEE TABLE

DWN E. BRANDBERG 27-JUL-95
CHK J. GESFORD 27-JUL-95
APVD D. DUPLER 27-JUL-95

PRODUCT SPEC —
APPLICATION SPEC —
WEIGHT —

TE Connectivity

NAME HEADER ASSY, AMPMODU MTE, RIGHT ANGLE, SINGLE ROW, .100CL, .025 SQ POSTS, WITH LATCH

SIZE	CAGE CODE	DRAWING NO	RESTRICTED TO
A1	00779	C-104935	—

CUSTOMER DRAWING SCALE 4:1 SHEET 1 OF 1 REV G

Mouser Electronics

Authorized Distributor

Click to View Pricing, Inventory, Delivery & Lifecycle Information:

TE Connectivity:

6-104935-7