THIS DRAWING IS UNPUBLISHED. RELEASED FOR PUBLICATION -,- .
© COPYRIGHT - By - ALL RIGHTS RESERVED.

REVISIONS					
P	LTR	DESCRIPTION	DATE	DWN	APVD
	B6	REVISED PER ECO-17-002273	10OCT2017	RK	AS

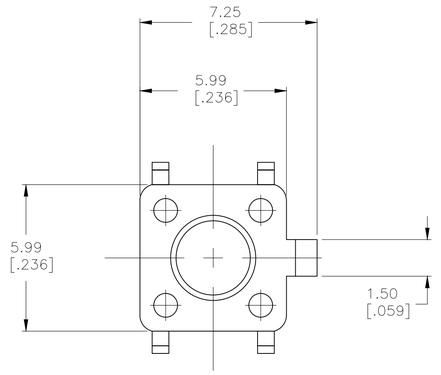

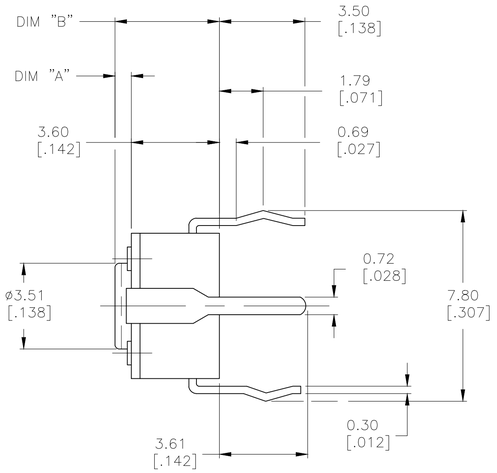

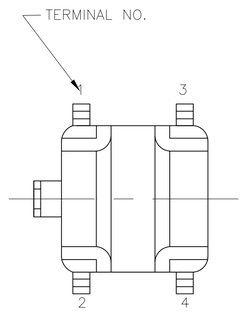

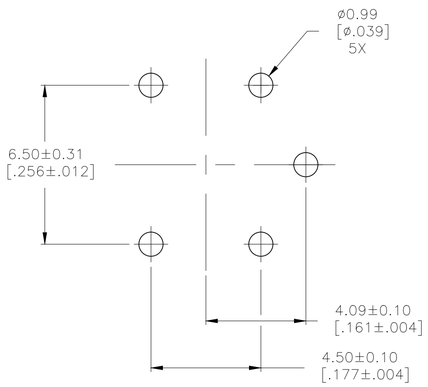

RECOMMENDE HOLE LAYOUT

TOLERANCE ±.002
UNLESS OTHERWISE NOTED

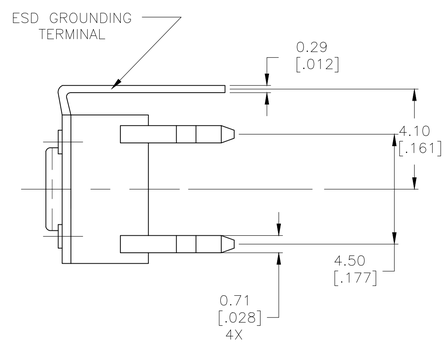

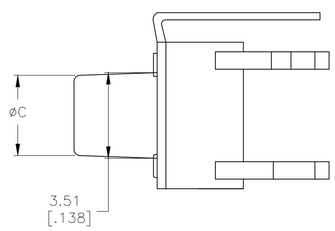

FSM5J THRU FSM17J

( ) – INDICATES MOMENTARY POSITION		
CIRCUIT CHARACTERSTICS		
CONTACT POSITION		CIRCUIT DIAMGRAM
		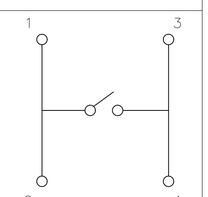
OFF	(ON) 1–3 2–4	

Specifications:

Materials:
CASE: NYLON 66 UL94HB, 30% GF–BLACK
ACTUATOR: PBT OR NYLON 66, UL94HB
COVER: STEEL–TIN PLATE
MOVING CONTACT: COPPER ALLOY–SILVER PLATE
FIXED CONTACT/TERMINAL: COPPER ALLOY–SILVER OVER NICKEL PLATE

Electrical:
Max Contact Rating: 50 milliamp@ 24V DC
Min Contact Rating: 10 microamp@1V DC
Initial Contact resistance, 100 milliohms max
Insulation Resistance, 100 Megohm min. @ 100V DC
Dielectric strength, 500 V AC for 1 minute
Life Expectancy, 100,000 cycles min (2 cycles per second and 150% actuation force)

Mechanical:
Actuation force, See Table
Actuation Travel, .010 +.008/–.004
Life Expectancy, 100,000 cycles min (2 cycles per second and 150% actuation force)

Environmental:
Operating Temperature, –35 to +85 degrees C
Storage Temperature, –35 to +85 degrees C
Thermal Shock, Per EIA–364–32C, –35 to +85 degrees C
Solderability, Per EIA–364–52, Class 2, Category 1, Category 2, 95% Minimum coverage
Resistance to Solder Heat, Per 109–202, Condition B

Notes:
1 ALL MATERIALS AND FINISHES SHALL COMPLY WITH EU DIRECTIVE 2002/95/EC OF 27JAN2003 (ROHS).

2 PACKAGED IN TRAY

	ACTUATOR MAT'L	ACTUATOR COLOR	ACTUATION FORCE	DIM C	DIM B	DIM A	MALCO P/N	P/N
OBSOLETE	2 PBT	BLACK	160 +/–50 GF	N/A	5.00 (.196)	1.40 (.055)	FSM3JHTR	3–1825955–7
	NYLON 6/6	YELLOW	520 +/–100 GF	3.09 (.122)	8.50 (.335)	4.90 (.193)	FSM17JAAH	3–1825955–6
	NYLON 6/6	WHITE	260 +/–50 GF	3.09 (.122)	8.50 (.335)	4.90 (.193)	FSM17JAH	3–1825955–5
	NYLON 6/6	BLACK	160 +/–50 GF	3.09 (.122)	8.50 (.335)	4.90 (.193)	FSM17JH	3–1825955–4
	NYLON 6/6	BROWN	100 +/–50 GF	3.09 (.122)	8.50 (.335)	4.90 (.193)	FSM17JLH	3–1825955–3
	NYLON 6/6	YELLOW	520 +/–100 GF	2.80 (.110)	17.00 (.669)	13.40 (.527)	FSM15JAAH	3–1825955–2
	NYLON 6/6	WHITE	260 +/–50 GF	2.80 (.110)	17.00 (.669)	13.40 (.527)	FSM15JAH	3–1825955–1
OBSOLETE	NYLON 6/6	BLACK	160 +/–50 GF	2.80 (.110)	17.00 (.669)	13.40 (.527)	FSM15JH	~~3–1825955–0~~
	NYLON 6/6	BROWN	100 +/–50 GF	2.80 (.110)	17.00 (.669)	13.40 (.527)	FSM15JLH	2–1825955–9
	NYLON 6/6	YELLOW	520 +/–100 GF	2.87 (.118)	13.00 (.512)	9.40 (.370)	FSM13JAAH	2–1825955–8
	NYLON 6/6	WHITE	260 +/–50 GF	2.87 (.118)	13.00 (.512)	9.40 (.370)	FSM13JAH	2–1825955–7
	NYLON 6/6	BLACK	160 +/–50 GF	2.87 (.118)	13.00 (.512)	9.40 (.370)	FSM13JH	2–1825955–6
OBSOLETE	NYLON 6/6	BROWN	100 +/–50 GF	2.87 (.118)	13.00 (.512)	9.40 (.370)	FSM13JLH	2–1825955–5
	NYLON 6/6	YELLOW	520 +/–100 GF	3.20 (.126)	8.00 (.315)	4.40 (.173)	FSM11JAAH	2–1825955–4
	NYLON 6/6	WHITE	260 +/–50 GF	3.20 (.126)	8.00 (.315)	4.40 (.173)	FSM11JAH	~~2–1825955–3~~
	NYLON 6/6	WHITE	160 +/–50 GF	3.20 (.126)	8.00 (.315)	4.40 (.173)	FSM11JH	2–1825955–2
	NYLON 6/6	BROWN	100 +/–50 GF	3.20 (.126)	8.00 (.315)	4.40 (.173)	FSM11JLH	2–1825955–1
OBSOLETE	NYLON 6/6	YELLOW	520 +/–100 GF	3.25 (.128)	7.30 (.287)	3.70 (.146)	FSM9JAAH	2–1825955–0
	NYLON 6/6	WHITE	260 +/–50 GF	3.25 (.128)	7.30 (.287)	3.70 (.146)	FSM9JAH	1–1825955–9
	NYLON 6/6	BLACK	160 +/–50 GF	3.25 (.128)	7.30 (.287)	3.70 (.146)	FSM9JH	~~1–1825955–8~~
	NYLON 6/6	BROWN	100 +/–50 GF	3.25 (.128)	7.30 (.287)	3.70 (.146)	FSM9JLH	1–1825955–7
	PBT	YELLOW	520 +/–100 GF	3.10 (.122)	9.50 (.374)	5.90(.232)	FSM7JAAH	1–1825955–6
	PBT	WHITE	260 +/–50 GF	3.10 (.122)	9.50 (.374)	5.90(.232)	FSM7JAH	1–1825955–5
	PBT	BLACK	160 +/–50 GF	3.10 (.122)	9.50 (.374)	5.90(.232)	FSM7JH	1–1825955–4
OBSOLETE	PBT	BROWN	100 +/–50 GF	3.10 (.122)	9.50 (.374)	5.90(.232)	FSM7JLH	1–1825955–3
	NYLON 6/6	YELLOW	520 +/–100 GF	3.30(.130)	7.00 (.276)	3.40 (.134)	FSM5JAAH	1–1825955–2
	NYLON 6/6	WHITE	260 +/–50 GF	3.30(.130)	7.00 (.276)	3.40 (.134)	FSM5JAH	1–1825955–1
	NYLON 6/6	BLUE	160 +/–50 GF	3.30(.130)	7.00 (.276)	3.40 (.134)	FSM5JH	1–1825955–0
OBSOLETE	NYLON 6/6	BROWN	100 +/–50 GF	3.30(.130)	7.00 (.276)	3.40 (.134)	FSM5JLH	1825955–9
	PBT	YELLOW	520 +/–100 GF	N/A	5.00 (.196)	1.40 (.055)	FSM3JAAH	1825955–8
	PBT	WHITE	260 +/–50 GF	N/A	5.00 (.196)	1.40 (.055)	FSM3JAH	~~1825955–7~~
	PBT	BLACK	160 +/–50 GF	N/A	5.00 (.196)	1.40 (.055)	FSM3JH	1825955–6
OBSOLETE	PBT	BROWN	100 +/–50 GF	N/A	5.00 (.196)	1.40 (.055)	FSM3JLH	1825955–5
	PBT	YELLOW	520 +/–100 GF	N/A	4.30 (.169)	0.70 (.028)	FSM1JAAH	1825955–4
	PBT	WHITE	260 +/–50 GF	N/A	4.30 (.169)	0.70 (.028)	FSM1JAH	~~1825955–3~~
	PBT	BLACK	160 +/–50 GF	N/A	4.30 (.169)	0.70 (.028)	FSM1JH	1825955–2
OBSOLETE	PBT	BROWN	100 +/–50 GF	N/A	4.30 (.169)	0.70 (.028)	FSM1JLH	1825955–1

THIS DRAWING IS A CONTROLLED DOCUMENT.

DIMENSIONS: mm [INCHES]

TOLERANCES UNLESS OTHERWISE SPECIFIED:
0 PLC ± –
1 PLC ± –
2 PLC ± 0.31[.012]
3 PLC ± –
4 PLC ± –
ANGLES ± 1°

MATERIAL: SEE SPECIFICATIONS
FINISH: SEE SPECIFICATIONS

DWN: C. MORAN 29DEC93
CHK: –
APVD: J. SYLVIA 29DEC93
PRODUCT SPEC: –
APPLICATION SPEC: –
WEIGHT: –

TE Connectivity

NAME: – 6MM TACT SWITCH THRU–HOLE W/ESD –

SIZE	CAGE CODE	DRAWING NO	RESTRICTED TO
A1	00779	C–1825955	–

CUSTOMER DRAWING | SCALE 8:1 | SHEET 1 OF 1 | REV B6

4805 (1/15)

Mouser Electronics

Authorized Distributor

Click to View Pricing, Inventory, Delivery & Lifecycle Information:

TE Connectivity:

1-1825955-8 FSM11JH FSM13JH FSM5JH