DRAWING MADE IN THIRD ANGLE PROJECTION

/home/us014442/dm.tecmod

PART NUMBER	REV	FIRST USED
1385642-1	A	122500-1
1385642-2	A	565435-5
1385642-3	A	354500-1

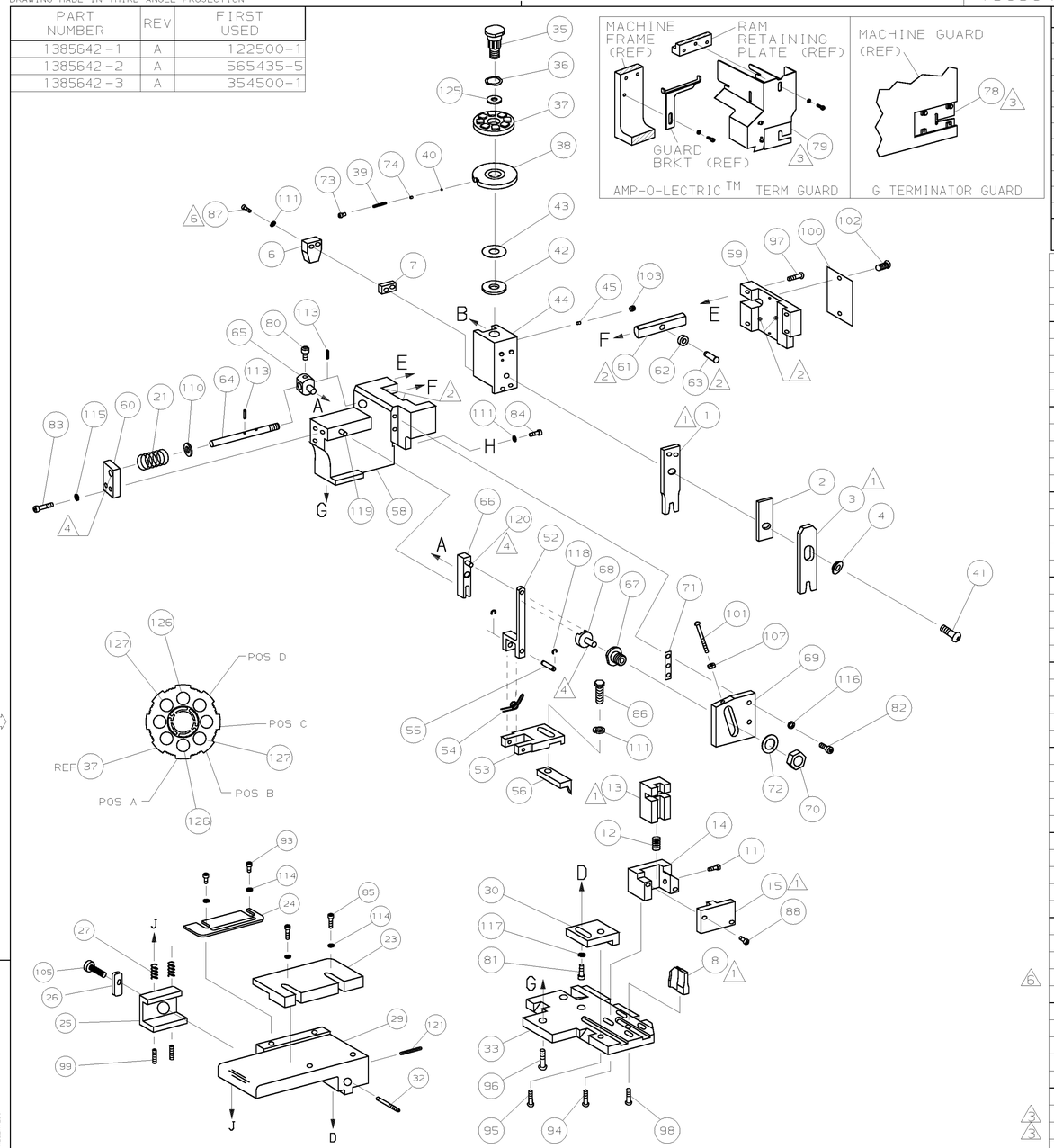

TERMINAL NAME: TERMINAL, FEMALE

AMP TERM PN	MFR TERM PN
1572323	02965143

DELPHI TERMINAL CUSTOMER CRIMP SPECS

PAD LTR	CRIMP HEIGHT	WIRE SIZE
A	.082 ±.002 [2.08 ±0.05mm]	12
B	.071 ±.002 [1.8 ±0.05mm]	14
C	NOT	USED
D	NOT	USED

CRIMP	SIZE	TYPE	RANGE
WIRE	.145 [3.68mm]	F	14-12
INSUL	.197 [5mm]	O	ø.161 MAX

WIRE STRIP LENGTH	TERM APPL SPEC	FEED	APPL INSTRUCTION	SET UP GAGE	LAYOUT
.188-.219	NONE	.684	408-8040	458637-1	L2866

-3	-2	-1	U/M	DWG SIZE	PART NO	DESCRIPTION	ITEM NO
							129
							128
2	2	2	-	C	9-354778-3	PIN, WIRE DISC (.2960)B	127
2	2	2	-	C	7-354778-0	PIN, WIRE DISC (.2845)A	126
1	1	1	-	A	986950-1	WASHER, FLAT PRECISION	125
1	1	1	-	A	217238-1	GENERAL INSTRUCTION PACKAGE	124
1	1	1	-	-	4088040	SF APPL INST 408-8040	123
							122
1	1	1	-	A	4-21028-0	PIN, SLTD SPRG(ø.094x.75)	121
1	1	1	-	A	1-21030-1	PIN,DOWEL(ø.187x.50)LEVER	120
1	1	1	-	A	1-21030-6	PIN,DOWEL(ø.187x1.25)HOUSING	119
2	2	2	-	A	21045-3	RING,RET "C"(ø.187)FD FING PIN	118
1	1	1	-	A	21024-5	WASHER, LOCK(#10)ADJ BLOCK	117
2	2	2	-	A	21024-5	WASHER,LOCK(#10)ADJ PLATE	116
2	2	2	-	A	21024-5	WASHER,LOCK(#10)FEED GDE ROD	115
4	4	4	-	A	21024-2	WASHER,LOCK(#4)FRONT STP GUIDE	114
2	2	2	-	A	5-21028-1	PIN,SLT SPR(ø.125x.50)ADJ ROD	113
							112
4	4	4	-	A	21024-4	WASHER,LOCK(#8)STRIPPER	111
1	1	1	-	A	21899-4	WASHER,FLAT(ø5/16)SCREW ADJ	110
							109
							108
1	1	1	-	A	21068-5	NUT,HEX(6-32)FEED ADJ	107
							106
1	1	1	-	A	22353-8	SCR,SHLD,SLOT HEAD(8-32)	105
1	1	-	-	A	992031-1	PIN, CLEVIS	104
1	1	1	-	A	21009-2	SCR,SKT SET(1/4-20x.25 LW)RAM	103
2	2	2	-	A	21017-2	SCR,DRIVE(#2x.19)ID PLATE	102
1	1	1	-	A	6-23715-5	SCR,PAN HD(6-32x1.50)FEED ADJ	101
1	1	1	-	B	461264-1	PLATE, IDENTIFICATION	100
2	2	2	-	A	5-21006-6	SCR,SET (10-32x.75)DRAG	99
1	1	1	-	A	22733-8	SCR,BHC(8-32x.38 LW)ANVIL	98
4	4	4	-	A	2-21002-9	SCR,BHC(10-32x.75)CAP	97
3	3	3	-	A	2-22733-8	SCR,BHC(1/4-20x.62)HOUSING	96
1	1	1	-	A	2-21002-7	SCR,BHC(10-32x.50)SG ADJ BLOCK	95
2	2	2	-	A	2-21002-2	SCR,BHC(8-32x.50)TERM H DWN	94
2	2	2	-	A	1-21000-3	SCR,BHC(4-40x.25)R STP GDE	93
							92
1	1	1	-	A	1-21002-7	SCR,BHC(6-32x.38)CAM	91
							90
1	1	-	-	A	7-21000-9	SCR,SHC(4-40x.19)STRIPPER	89
2	2	2	-	A	1-21000-9	SCR,SHC(6-32x.38)R SHEAR PLATE	88
2	2	2	-	A	3-21000-0	SCR,SKT CAP (8-32x.81) R DEP	87
1	1	1	-	A	2-22603-0	SCR,HEX HD(8-32x.31)FEED FINGER	86
2	2	2	-	A	1-21000-5	SCR,SHC(4-40x.50)FR ST GUIDE	85
1	1	1	-	A	2-21000-7	SCR,SHC(8-32x.50)STRIPPER	84
2	2	2	-	A	3-21000-7	SCR,SHC(10-32x.75)FEED ROD GD	83
2	2	2	-	A	3-21000-6	SCR,SHC(10-32x.62)FD ADJ BLK	82
1	1	1	-	A	3-21000-4	SCR,SHC(10-32x.38)SG ADJ BL	81
1	1	1	-	A	3-21000-4	SCR,SHC(10-32x.38)PIVOT BLK	80
-	REF	-	-	B	455749-1	GUARD, WINDOW	79
REF	-	-	-	B	679532-1	INSERT, GUARD	78
							77
							76
							75
1	1	1	-	A	690603-1	SPRING, ASSIST	74
1	1	1	-	A	23030-1	SCR,SHC(6-32x.25 SL)INS DISC	73
1	1	1	-	A	458109-1	WASHER, SPECIAL	72
1	1	1	-	A	690517-1	SPACER	71

QTY REQD PER ASSY — PARTS LIST

-1	LEADMAKER	MECH POST FEED
-2	BENCH MODEL K	MECH PRE FEED
-3	BENCH MODEL G	MECH PRE FEED

-3	-2	-1	U/M	DWG SIZE	PART NO	DESCRIPTION	ITEM NO
1	1	1	-	B	22594-8	NUT,HEX(1/2-20)	70
1	1	1	-	B	240628-1	PLATE, ADJUSTMENT	69
1	1	1	-	B	240626-1	SHAFT, PIVOT	68
1	1	1	-	B	240633-1	BUSHING	67
1	1	1	-	A	455680-1	LEVER, INTERMEDIATE	66
1	1	1	-	B	240629-1	BLOCK, PIVOT	65
1	1	1	-	A	240632-2	SCREW, ADJ FEED ROD	64
1	1	1	-	B	240659-3	PIN, CAM ROLLER	63
1	1	1	-	B	240658-1	ROLLER, CAM	62
1	1	1	-	B	454398-2	ROD, FEED	61
1	1	1	-	A	454178-1	GUIDE, FEED ROD	60
1	1	1	-	C	454220-1	CAP, RAM	59
1	1	1	-	D	454485-1	HOUSING	58
							57
1	1	1	-	B	3-694433-9	PAWL, FEED	56
1	1	1	-	B	240624-1	PIN, FEED FINGER	55
1	1	1	-	B	691499-1	SPRING, FEED FINGER	54
1	1	1	-	B	690541-1	HOLDER, FEED FINGER	53
1	1	1	-	A	455679-1	LEVER, TERMINAL FEED ARM	52
							51
							50
1	-	-	-	B	690602-6	CAM, PRE-FEED 1 5/8 ST	49
-	1	-	-	B	690602-5	CAM, PRE-FEED 1 1/8 ST	48
-	-	1	-	B	690501-4	CAM, POST-FEED 1 5/8 ST	47
							46
1	1	1	-	A	690191-1	PLUG, NYLON	45
1	1	1	-	C	455673-1	RAM	44
1	1	1	-	A	690125-1	WASHER, LAMINATED	43
1	1	1	-	A	690124-1	WASHER, RAM	42
1	1	1	-	A	7-21002-9	BOLT, CRIMPER(5/16x1.00)	41
1	1	1	-	A	23241-6	BALL, STEEL	40
1	1	1	-	A	690170-1	SPRING, COMPRESSION	39
1	1	1	-	C	690142-1	DISC, INSULATION	38
1	1	1	-	D	354777-1	WIRE DISC, PLASTIC	37
1	1	1	-	A	22480-5	WASHER, SPRING	36
1	1	1	-	B	690212-1	POST, RAM	35
							34
1	1	1	-	D	455675-3	PLATE, BASE	33
1	1	1	-	A	690432-3	ADJUSTMENT SCREW	32
							31
1	1	1	-	B	455689-1	BLOCK, STRIP GUIDE ADJ	30
1	1	1	-	C	1-844048-7	PLATE, STRIP GUIDE	29
							28
2	2	2	-	A	1-22284-0	SPRING, DRAG	27
1	1	1	-	B	240793-1	LEVER, DRAG RELEASE	26
1	1	1	-	B	1673009-1	DRAG, TERMINAL	25
1	1	1	-	D	690438-1	GUIDE, STRIP (REAR)	24
1	1	1	-	A	1-189124-1	GUIDE, STRIP (FRONT)	23
-	-	1	-	B	690472-2	STRIPPER	22
1	1	1	-	A	4-22284-9	SPRING, FEED RETURN	21
1	1	-	-	A	679218-1	STRIPPER WIRE STOP ASSY	20
1	1	-	-	B	458949-1	STRIPPER	19
							18
							17
							16
1	1	1	-	C	1673256-2	PLATE, SHEAR (REAR)	15
1	1	1	-	C	1673255-1	HOLDER, SHEAR (REAR)	14
1	1	1	-	C	1673257-2	SHEAR, FLOAT (REAR)	13
1	1	1	-	A	4-22280-8	SPRING, SHEAR	12
1	1	1	-	B	690461-7	STOP, SHEAR	11
							10
							9
1	1	1	-	C	2-1424534-2	ANVIL	8
1	1	1	-	C	4-240641-7	SPACER, DEPRESSOR (REAR)	7
1	1	1	-	B	690468-6	DEPRESSOR, SHEAR (REAR)	6
							5
1	1	1	-	B	1-238009-1	SPACER, BLOCK CRIMPER	4
1	1	1	-	C	2-1424909-2	CRIMPER, INSULATION	3
1	1	1	-	C	1-455888-0	SPACER, CRIMPER	2
1	1	1	-	C	4-568176-2	CRIMPER, WIRE	1

QTY REQD PER ASSY — PARTS LIST

REVISION OF EACH ASSY NO (WHEN BLANK, USE DWG REVISION)

1. RECOMMENDED SPARE PARTS.
2. GREASE LIGHTLY.
3. GUARD MUST BE IN PLACE WHEN OPERATING APPLICATOR IN A BENCH MACHINE.
4. LUBRICATE DAILY USING NO. 20 MACHINE OIL.
5. ITEMS WITH QTY OF REF SPECIFIED (EXCEPT ITEMS 78 AND 79) ARE USED ON ITEM 46.
6. CUT TO LENGTH AT ASSEMBLY.

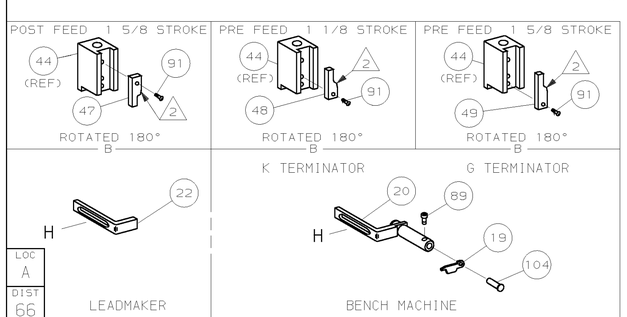

P	F	LTR	REVISION RECORD	APP	DATE
		A	REVD	CE	AUG03

DIMENSIONS IN INCHES. DO NOT SCALE PRINT. TOLERANCES UNLESS OTHERWISE SPECIFIED: 2 PLC DEC ±- 3 PLC DEC ±- 4 PLC DEC ±- ANGLES ± - SURF TEXTURE, √ REMOVE BURRS, BREAK SHARP EDGES R.015 MAX

MATL - -	HT TR - -	FIN - -
DR 31JUL03 C.ERISMAN	APP 31JUL03 C.ERISMAN	AMP Incorporated Harrisburg, PA 17105-3608
CHK 31JUL03 C.ERISMAN	REL - -	
NAME SIDE FEED HDM APPLICATOR		MACHINE REF MINI APPL
SCALE -	DWG NO D 1385642	SHEET 1 OF 1 / REV A
CAGE CODE 00779	CUSTOMER AND ASSEMBLY DRAWING	RESTRICTED TO —

LOC A / DIST 66

THIS DRAWING IS A CONTROLLED DOCUMENT.
RELEASED FOR PUBLICATION SEPTEMBER 10,2002
BY AMP INCORPORATED. ALL RIGHTS RESERVED.
© COPYRIGHT 2002

Mouser Electronics

Authorized Distributor

Click to View Pricing, Inventory, Delivery & Lifecycle Information:

TE Connectivity:

1385642-3