THIS DRAWING IS UNPUBLISHED. RELEASED FOR PUBLICATION -,- .
© COPYRIGHT - By - ALL RIGHTS RESERVED.

LOC	DIST
AA	00

REVISIONS

P	LTR	DESCRIPTION	DATE	DWN	APVD
	D2	REV PER ECR-11-009904	11MAY2011	JJ	MQ.W

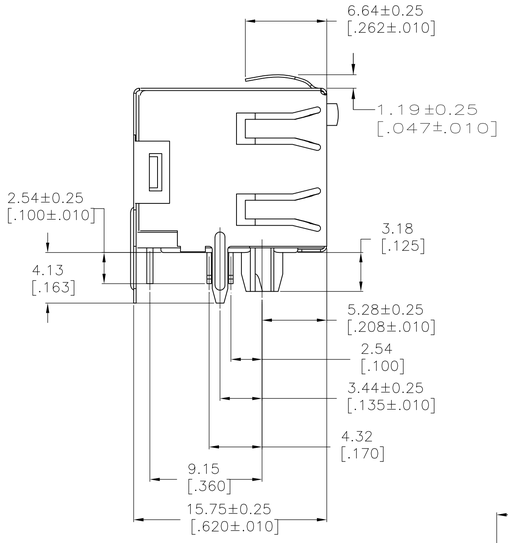

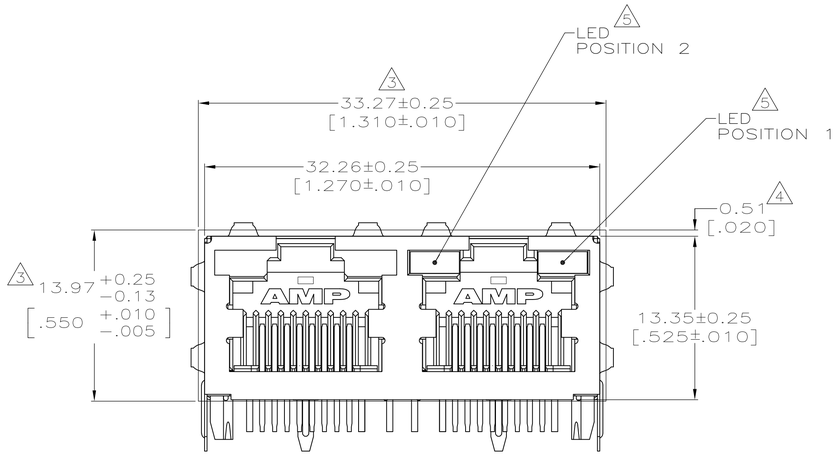

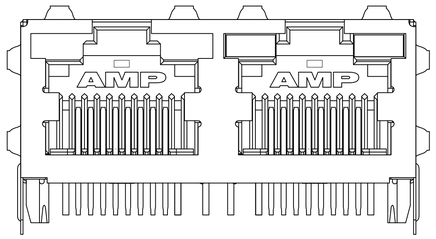

VIEW ONLY FOR 1761791-5 9

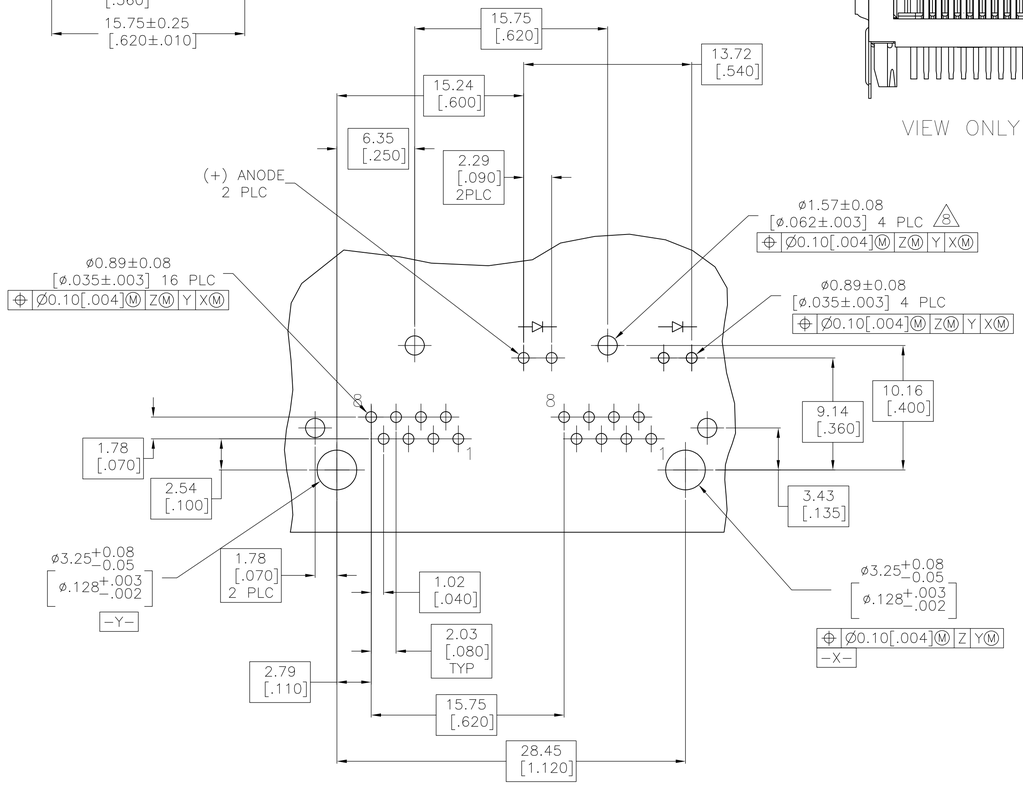

RECOMMENDED PRINTED CIRCUIT BOARD LAYOUT
COMPONENT SIDE

1 MATERIAL:
HOUSING – HIGH TEMPERATURE THERMOPLASTIC, COLOR: BLACK, UL94V-0
TERMINALS – 0.36[.014] THICK PHOS BRONZE PLATED WITH 3.81µm[.000150] MIN THICK BRIGHT TIN LEAD IN SOLDER AREA, 1.27µm[.000050] MIN GOLD IN LOCALIZED PLATE AREA. ENTIRE TERMINAL PLATED WITH 1.27µm[.000050] MIN THICK NICKEL.
SHIELD – 0.196[.0077] THICK COPPER ZINC ALLOY PREPLATED WITH 1.27µm[.000050] MIN SATIN NICKEL WITH 2.03µm[.000080] MIN TIN POST DIPPED ON PCB GROUND TABS
LIGHT EMITTING DIODE (LED) – DIFFUSED EPOXY LENS, 0.51 X 0.51[.020 X .020] CARBON STEEL WIREFRAME LEADS PLATED WITH 8.89µm[.000350] TIN/COPPER OVER 2.03µm[.000080] SILVER OVER 1.02µm[.000040] NICKEL UNDERPLATE OVER 2.03µm[.000080] COPPER UNDERPLATE

2. JACK CAVITY CONFORMS TO FCC RULES AND REGULATIIONS PART 68, SUBPART F.

3 SUGGESTED PANEL OPENING DIMENSIONS.

4 SUGGESTED CLEARANCE BETWEEN TOP OF CONNECTOR AND TOP PANEL OPENING.

5 SEE TABLE FOR COLOR OF LEDS AND NUMBER REQUIRED.

6. THIS MODULAR JACK WITH INTEGRATED LED IS NOT IR REFLOW SOLDERING PROCESS COMPATIBLE.

7 MATERIAL:
HOUSING – HIGH TEMPERATURE THERMOPLASTIC, COLOR: BLACK, UL94V-0
TERMINALS – 0.36[.014] THICK PHOS BRONZE PLATED WITH 3.81µm[.000150] MIN THICK TIN IN SOLDER AREA, 1.27µm[.000050] MIN GOLD IN LOCALIZED PLATE AREA. ENTIRE TERMINAL PLATED WITH 1.27µm[.000050] MIN THICK NICKEL.
SHIELD – 0.196[.0077] THICK COPPER ZINC ALLOY PREPLATED WITH 1.27µm[.000050] MIN SATIN NICKEL WITH 2.03µm[.000080] MIN TIN POST DIPPED ON PCB GROUND TABS
LIGHT EMITTING DIODE (LED) – DIFFUSED EPOXY LENS, 0.51 X 0.51[.020 X .020] CARBON STEEL WIREFRAME LEADS PLATED WITH 8.89µm[.000350] TIN/COPPER OVER 2.03µm[.000080] SILVER OVER 1.02µm[.000040] NICKEL UNDERPLATE OVER 2.03µm[.000080] COPPER UNDERPLATE

8 HOLES ON PCB FOR PCB GROUND TABS ACCORD TO CERTAIN PN.

9 1761791-5 HAS NO PCB GROUND TABS ON ITS REAR, HOLES ON PCB FOR THESE TABS ARE OPTIONAL.

GREEN	GREEN	7	1761791-5
GREEN	GREEN	7	1761791-4
YELLOW	GREEN	7	1761791-3
GREEN	GREEN	1	1761791-2
YELLOW	GREEN	1	1761791-1
POSITION 2	POSITION 1		PART NUMBER
INDICATOR COLOR FOR EACH HOUSING			

THIS DRAWING IS A CONTROLLED DOCUMENT.

DIMENSIONS: mm [INCHES]

TOLERANCES UNLESS OTHERWISE SPECIFIED:
0 PLC ± –
1 PLC ± –
2 PLC ± 0.25[.01]
3 PLC ± 0.13[.005]
4 PLC ± –
ANGLES ± –

MATERIAL 1 7
FINISH 1 7

DWN 110CT2007 RG/L.A.MAYER
CHK –
APVD –
PRODUCT SPEC 108-1163-4
APPLICATION SPEC 114-2154
WEIGHT –

TE Connectivity

NAME INVERTED MOD JACK ASSEMBLY, 1X2, SHIELDED, PANEL GROUND, LED

SIZE	CAGE CODE	DRAWING NO	RESTRICTED TO
A1	00779	C-1761791	–

CUSTOMER DRAWING SCALE 4:1 SHEET 1 OF 1 REV D2

Mouser Electronics

Authorized Distributor

Click to View Pricing, Inventory, Delivery & Lifecycle Information:

TE Connectivity:

1761791-1