THIS DRAWING IS UNPUBLISHED. RELEASED FOR PUBLICATION -,- .
© COPYRIGHT - By - ALL RIGHTS RESERVED.

LOC	DIST
H	—

REVISIONS

P	LTR	DESCRIPTION	DATE	DWN	APVD
	A	INITIAL RELEASE	29NOV2013	YC	BvH
	A1	ECR-14-015049	13OCT2014	GSK	BvH

NOTES:
Tolerances cable lengths:

0m to 0.5m	+30mm
0.5m to 1.0m	+50mm
1.0m to 3.0m	+100mm
< 3.0m	+1.5%

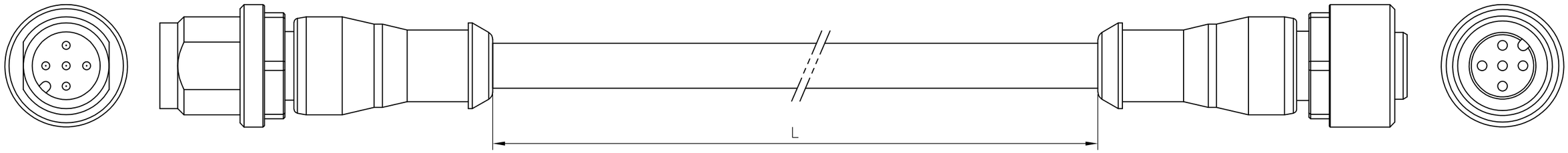

TECHNICAL DATA	
Operating voltage	max. 125 V AC/DC
Operating current per contact	max. 4 A
Locking of ports	Screw thread M12 x 1 mm (recommended torque 0.6 Nm) self-securing
Protection	IP65 and IP67 when plugged and screwed down (EN 60529)

PUR CABLE	
No./diameter of wires	5 x 0.34 mm²
Wire isolation	PP (br, wh, bl, bk, gnye)
C-track properties	yes
Jacket	PUR (UL/CSA)
Outer diameter	approx. 5.0 mm
Bend radius (moving)	10 x outer diameter
Temperature range (fixed)	-50...+80 °C
Temperature range (mobile)	-25...+80 °C

PVC CABLE	
No./diameter of wires	5 x 0.34 mm²
Wire isolation	PVC (br, wh, bl, bk, gnye)
C-track properties	
Jacket	PVC (UL/CSA)
Outer diameter	approx. 5.2 mm
Bend radius (moving)	10 x outer diameter
Temperature range (fixed)	-30...+80 °C
Temperature range (mobile)	-5...+80 °C

Contact Layout

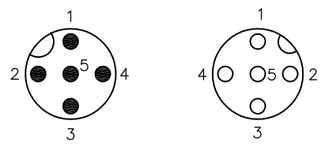

Schematic diagram

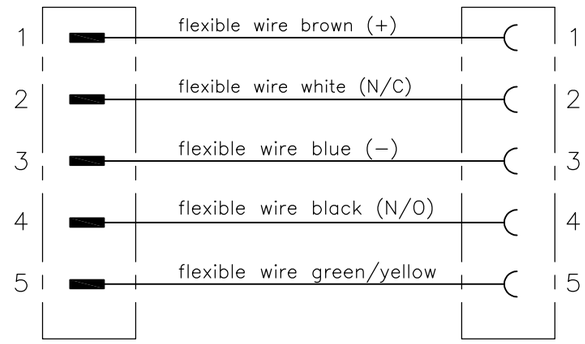

	LENGTH"L"	MATERIAL	JACKET COLOR	TE PN	DESCRIPTION	ITEM
5 pos	2.0mtr	PVC	Black	1-2273114-5	5x22AWG PVC 2.0m	10
	1.5mtr			1-2273114-4	5x22AWG PVC 1.5m	9
	1.0mtr			1-2273114-3	5x22AWG PVC 1.0m	8
	0.6mtr			1-2273114-2	5x22AWG PVC 0.6m	7
	0.3mtr			1-2273114-1	5x22AWG PVC 0.3m	6
5 pos	2.0mtr	PUR	Black	2273114-5	5x22AWG PUR 2.0m	5
	1.5mtr			2273114-4	5x22AWG PUR 1.5m	4
	1.0mtr			2273114-3	5x22AWG PUR 1.0m	3
	0.6mtr			2273114-2	5x22AWG PUR 0.6m	2
	0.3mtr			2273114-1	5x22AWG PUR 0.3m	1

THIS DRAWING IS A CONTROLLED DOCUMENT.

DIMENSIONS: mm

TOLERANCES UNLESS OTHERWISE SPECIFIED:
0 PLC ±-
1 PLC ±-
2 PLC ±-
3 PLC ±-
4 PLC ±-
ANGLES ±-

MATERIAL -
FINISH -

DWN YATHISH.C 29NOV2013
CHK B.VELDHOVEN 29NOV2013
APVD A.VAN ZANDVOORT 29NOV2013
PRODUCT SPEC 108-19483
APPLICATION SPEC 114-32127
WEIGHT -

TE Connectivity

NAME M12 STRGT PLUG TO M12 STRGT SOCKET AA

SIZE A3 | CAGE CODE 00779 | DRAWING NO C-2273114 | RESTRICTED TO -

CUSTOMER DRAWING | SCALE NTS | SHEET 1 OF 1 | REV A1

Mouser Electronics

Authorized Distributor

Click to View Pricing, Inventory, Delivery & Lifecycle Information:

TE Connectivity:

2273114-3