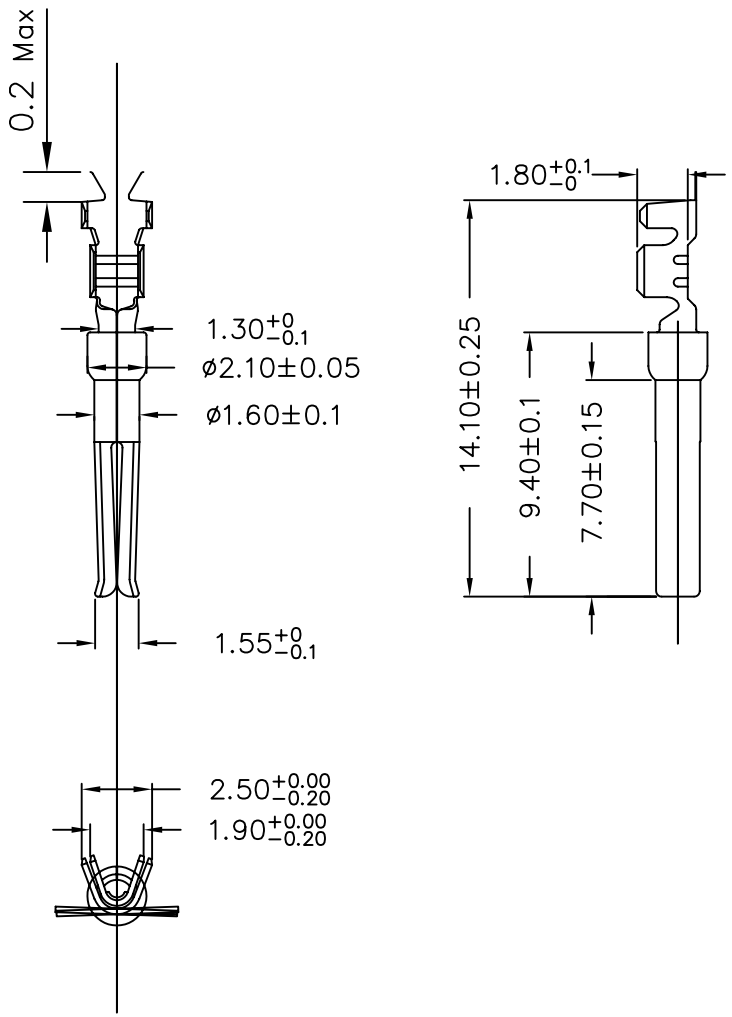

TECHNICAL DATA

D-SUBMINIATURE CONNECTORS

Contact : Phosphor bronze

Wire Size : AWG 20 to 24

Electrical

Contact Resistance :
10 milli-ohms Max. mated

PRODUCT CODE

L 17 RR D1 F 01 100

- L: RoHS Compliance
- Standard Density
- Wire size: 20 to 24 AWG
- Contact type: F=Female
- Full Gold Plating: 01= 0.2um(8u") 02= 0.5um(20u") 04= 0.76um(30u")
- Packaging 100= 100PCS/PE BAG

Amphenol Socapex	TOL. GEN. : +/-0.30							
	VOLUME:							
	AREA:							
	PLATING:							
SERIES	TREATMENT:							
NUMBER SERIES L17 RR Series	MATERIAL:			origin drawing	Roger	10/09'06	Lik	B
	FILE:	CUSTOMER		MODIFICATIONS	DRAW	DATE	APPROVE	IND.
DATE 2006.10.09	DESIGNATION Standard Density Crimp Contact Socket	INTERNAL PART NUMBER L17RRD1F01100						

Amphenol RoHS Compliant EU 2002/95/EC

Mouser Electronics

Authorized Distributor

Click to View Pricing, Inventory, Delivery & Lifecycle Information:

Amphenol:
L17RRD1F01100