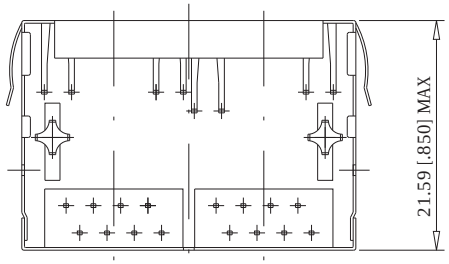

RECOMMENDED PANEL CUTOUT
EMPFOHLENER FRONTPLATTEN AUSSCHNITT

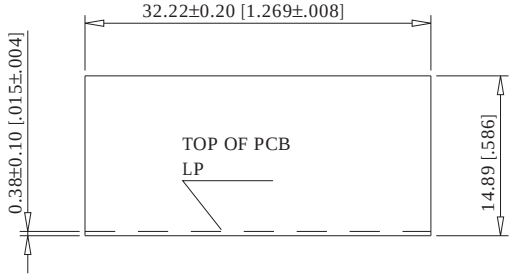

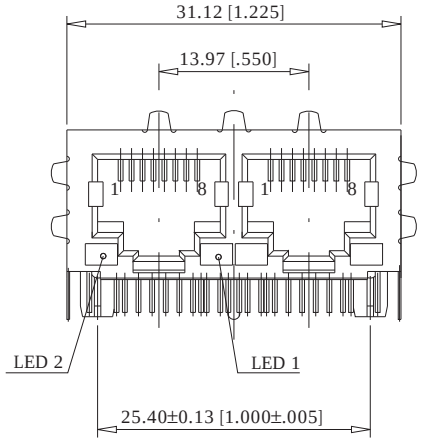

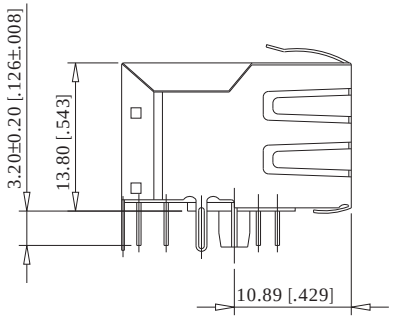

NOTE 1: ONE REAR SHIELD TAB CENTERED
NOTE 2: SIDE GROUND TAB REAR OF PEG 3.05 mm (R)
NOTE 3: PANEL GROUND FLANGES BOTH SIDES, BOTTOM AND TOP (GF5)

NO. IDENT. NR.	LED 2 LEFT LED 2 LINK	LED 1 RIGHT LED 1 RECHTE	LED CODE
203312	YELLOW	GREEN	L1
203313	GREEN	YELLOW	L2
203314	GREEN	GREEN	L3
203315	GREEN	RED	L4
203316	ORANGE/GREEN	ORANGE/GREEN	L9

MATERIALS AND FINISH
- HOUSING: GLASS FILLED POLYESTER UL 94 V-0 BLACK
- SHIELDING: Cu ALLOY, PLATED WITH Ni
- CONTACTS: PHOSPHOR BRONZE
- CONTACT FINISH: Au, 0.8 µm (30 µin) OVER Ni
- TERMINAL FINISH: SnPb
- LED LENS: EPOXY

MECHANICAL CHARACTERISTICS
- DURABILITY: 1000 MATING CYCLES

ELECTRICAL CHARACTERISTICS
- CONTACT RESISTANCE: 30 MILLIOHMS MAX
- OPERATING TEMPERATURE: 0°C TO 70°C

Information:

Tolerances

All Dimensions in mm

Scale 2:1

-
-

All rights reserved.
Only for information.
To insure that this is the latest version of this drawing, please contact one of the ERNI companies before using.

Subject to modification without prior notice.
Drawing will not be updated.

Designation

MOD JACK - MJIM

8C8T, 1X2, INT. MAG., LED

ERNI www.ERNI.com

203311

Consider protection memo from DIN 34

Index	Date
-	-

MAXMJ

ELECTRICAL SCHEMATIC M3D01

ELEKTRISCHES DIAGRAMM

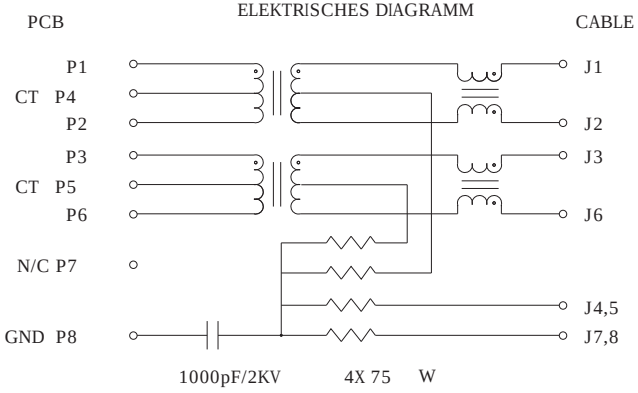

RECOMMENDED PCB LAYOUT - COMPONENT SIDE VIEW

EMPFOHLENER FUER LEITERPLATTE - BESTUCKUNGSSEITE

ALL TOLERANCES ±0.05 UNLESS NOTED

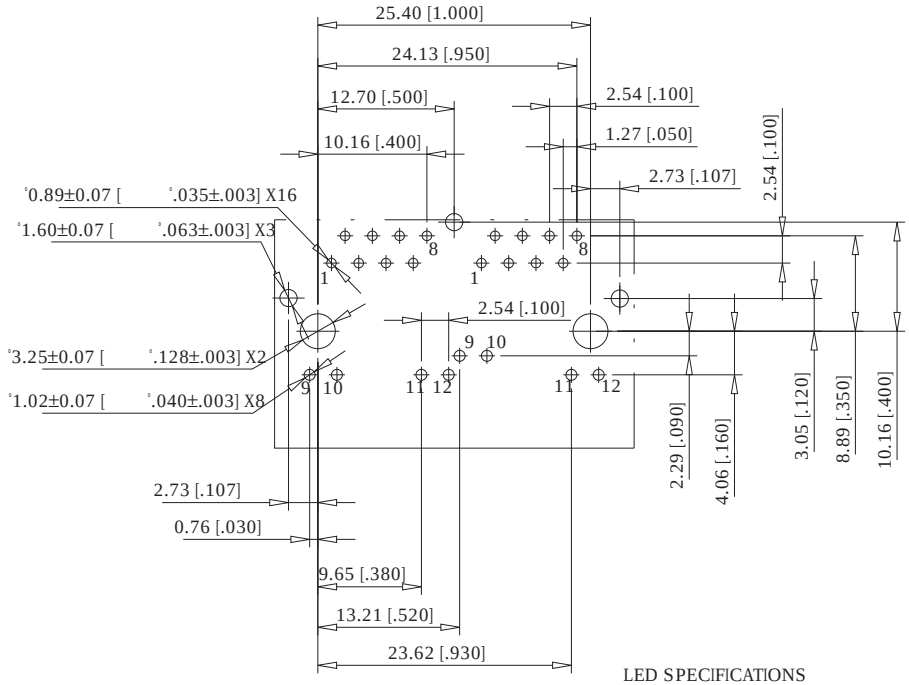

LED SPECIFICATIONS

LED ANWEISUNG

COLOR FARBE	V_f TYP	V_f MAX	I_f mA	CIRCUIT DIAGRAM SCHALTSKIZZE
YELLOW	2.1	2.5	20	9 10 / 11 12
GREEN	2.2	2.5	20	9 10 / 11 12
RED	2.25	2.5	20	9 10 / 11 12
ORANGE/GREEN	2.05/2.2	2.5	20	9 10 / 11 12 G N / G N

MAGNETICS SPECIFICATIONS @ 25°C

AUTO MDIX COMPATIBLE

TURNS RATIO:

(P1-P2 : J1-J2) 1CT : 1 ±3%

(P3-P6 : J3-J6) 1CT : 1 ±3%

OCL(100 KHz, 0.1 Vrms, 8 mA)

(P1-P2 : P3-P6) 350µH MIN

DCR (P1-P2, P3-P6) 0.9 OHMS MAX

INSERTION LOSS:

0.1-100 MHz -1.1 dB MAX

RETURN LOSS:

0.5 - 30 MHz: -18 dB MIN

40 MHz: -15.5 dB MIN

50 MHz -13.6 dB MIN

60 - 80 MHz -12 dB MIN

CROSSTALK:

1-100 MHz -40 dB TYP

CMR:

0.1 - 30 MHz -50 dB TYP

30 - 60 MHz -40 dB TYP

60 - 100 MHz -35 dB TYP

ISOLATION 1500 Vrms

Information:

SCHEMATIC NO: M3D01

Tolerances

All Dimensions in mm

Scale 2:1

All rights reserved.
Only for information.
To insure that this is the latest version of this drawing, please contact one of the ERNI companies before using.

Subject to modification without prior notice.
Drawing will not be updated.

Designation

MOD JACK - MJIM

8C8T, 1X2, INT. MAG., LED

ERNI www.ERNI.com

203311

Index -

Date -

MAXMJ

Consider protection memo from DIN 34

Mouser Electronics

Authorized Distributor

Click to View Pricing, Inventory, Delivery & Lifecycle Information:

ERNI Electronics:

203316