THIS DRAWING IS UNPUBLISHED. RELEASED FOR PUBLICATION 2006
© COPYRIGHT 2006 BY - ALL RIGHTS RESERVED.

REVISIONS

P	LTR	DESCRIPTION	DATE	DWN	APVD
	A2	REVISED PER ECR-16-016780	28AUG2017	NG	MKO

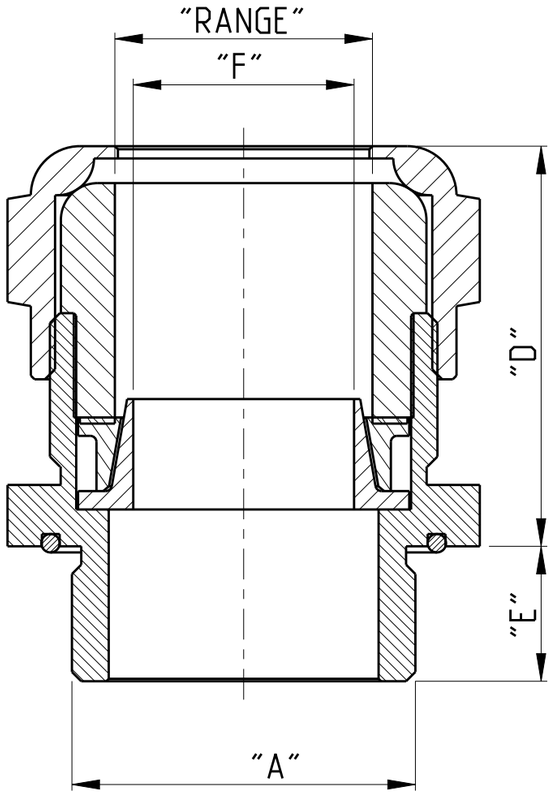

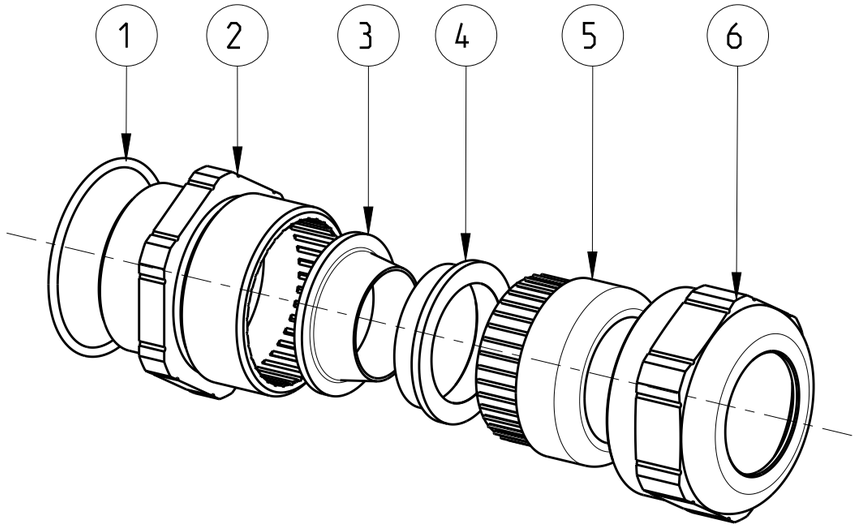

Notes

1. PACKAGING: 10 PIECES IN A CARTON
2. PACKAGING: 5 PIECES IN A CARTON

QTY.	DESCRIPTION	MATERIAL	SURFACE / COLOR	ITEM
1	SEALING INSERT	TPE-V		6
1	PRESSURE NUT	BRASS	NICKEL PLATED	5
1	OUTER CONE	BRASS	NICKEL PLATED	4
1	INNER CONE	BRASS	NICKEL PLATED	3
1	DOUBLE NIPPLE	BRASS	NICKEL PLATED	2
1	O-RING	NBR	BLACK	1

PARTS LIST

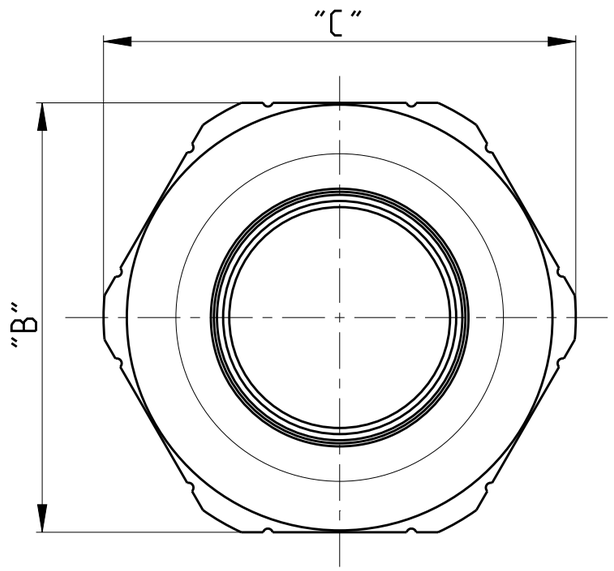

	PART NO.	"A"	"B"	"C"	"D"	"E"	"F"	"RANGE"	WEIGHT [kg]
		DIMENSIONS							
2 OBSOLETE	~~2-5~~	PG 29	40	43.5	39	13	24	26.0-22.0	0.153
2	2-3	PG 29	40	43.5	39	13	20	23.0-19.0	0.151
1	2-2	PG 21	35	38.5	34	12	18	20.0-17.0	0.132
1	1-9	PG 21	30	33.5	32	12	13	16.5-14.0	0.132
1	1-8	PG 21	30	35.5	32	12	10.5	14.0-10.0	0.132
1	1-6	PG 16	30	33.5	32	11	13	16.5-14.0	0.096
1 OBSOLETE	~~1-4~~	PG 16	30	33.5	32	11	8	11.5-10.0	0.095
1	1-1	PG 16	30	33.5	32	11	7	10.5-8.0	0.095
1 OBSOLETE	~~0-7~~	PG 13.5	24	26.7	31	10	3.3	6.5-4.0	0.081
1	0-6	PG 11	24	26.7	31	10	7	11.0-8.0	0.072
1	0-4	PG 11	24	26.7	31	10	6	6.5-4.0	0.073

THIS DRAWING IS A CONTROLLED DOCUMENT.

DIMENSIONS: mm

TOLERANCES UNLESS OTHERWISE SPECIFIED:
0 PLC ±-
1 PLC ±-
2 PLC ±-
3 PLC ±-
4 PLC ±-
ANGLES ±1°

MATERIAL - material_2

FINISH - finish_spec_2

DWN H.J.BAUM 21JUL2009
CHK T.SCHNURPFEIL 21JUL2009
APVD - -
PRODUCT SPEC -
APPLICATION SPEC -
WEIGHT -

TE Connectivity

NAME CABLE GLAND ASS'Y SERIES EMV-DICHT, PG -

SIZE	CAGE CODE	DRAWING NO	RESTRICTED TO
A3	00779	C-1106007	-

CUSTOMER DRAWING | SCALE 5:1 | SHEET 1 OF 1 | REV A2

1470-19 (3/13)

Mouser Electronics

Authorized Distributor

Click to View Pricing, Inventory, Delivery & Lifecycle Information:

TE Connectivity:

2-1106007-5