THIS DRAWING IS UNPUBLISHED. RELEASED FOR PUBLICATION 20
© COPYRIGHT 20 BY - ALL RIGHTS RESERVED.

LOC	DIST
AP	-

Pro ENGINEER WILDFIRE 4.0
DO NOT REVISE EXCEPT BY CAD

REVISIONS

P	LTR	DESCRIPTION	DATE	DWN	APVD
	E	REVISED BY ECO-07-011909	22MAY2007	NCL	MR
	F	UPDATE DRAWING ECO-13-009262	03JUN2013	NCL	BR

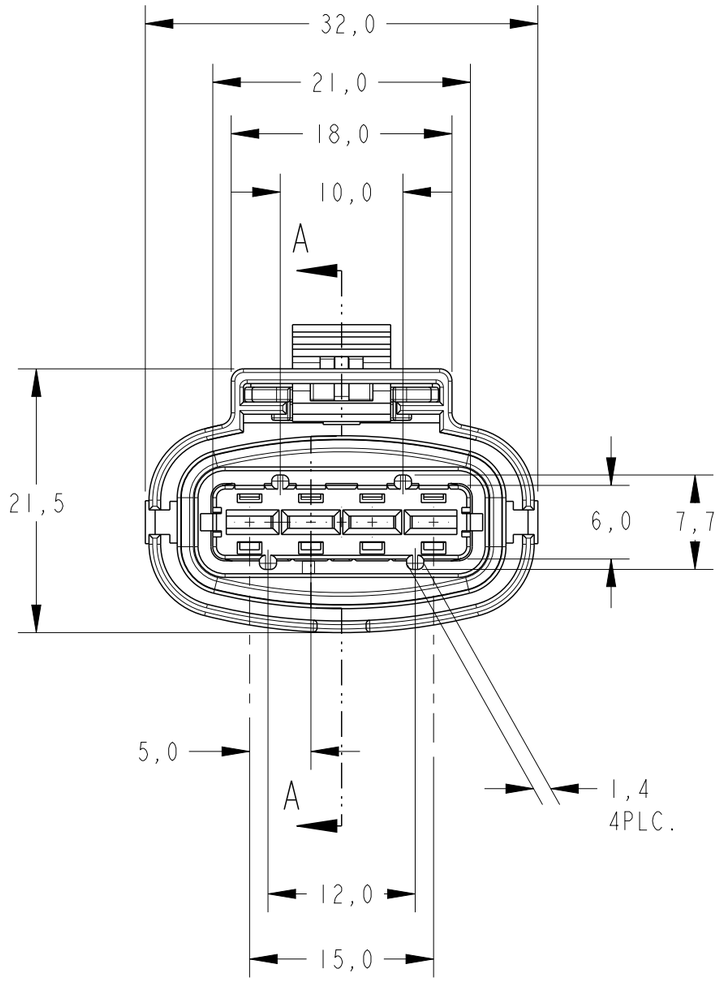

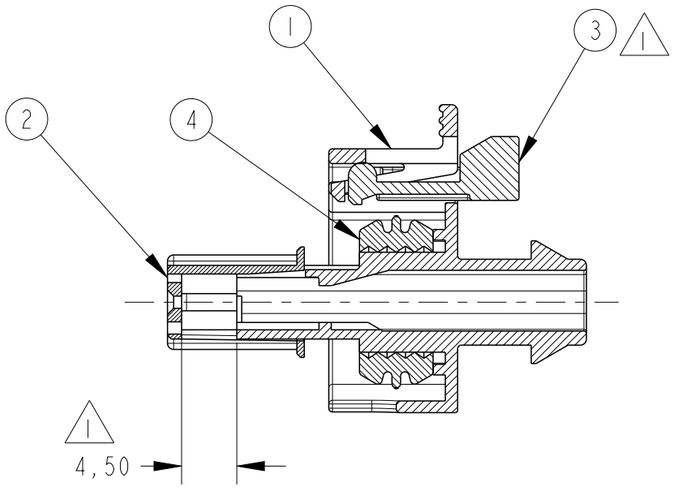

SECTION A-A

1 - POSIÇÃO DE PRÉ TRAVAMENTO DA TRAVA SECUNDÁRIA, FORNECIDO CONFORME MOSTRADO.

2 - TERMINAIS E SELOS: VIDE DESENHO GRUPO DE PRODUTO - C 1355038.

1 - PRE LOCK POSITION OF SECONDARY LOCK, SUPPLIED AS SHOWN.

2 - TERMINALS AND SEALS: SEE PRODUCT GROUP DRAWING - C 1355038.

GRAVAÇÃO MARKING
LOGOTIPO TYCO TYCO LOGO
CÓDIGO PAÍS PRODUTOR MANUFACTURER COUNTRY CODE
NOMENCLATURA MATERIAL MATERIAL NOMENCLATURE
NÚMERO COMPONENTE TE TE COMPONENT NUMBER
NÚMERO CAVIDADE CAVITY NUMBER
IDENTIFICAÇÃO CIRCUITO CIRCUIT IDENTIFICATION
PAÍS PRODUTOR MANUFACTURER COUNTRY
REVISÃO DA PEÇA PART REVISION

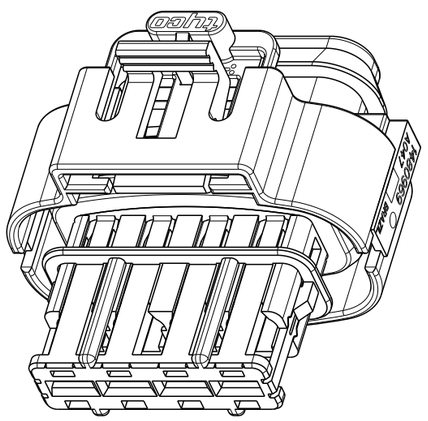

PERSPECTIVE VIEW
SCALE 2:1

REQ.PER ASSY	ITEM	DESCRIPTION	MATERIAL	FINISH
1	4	SEAL, 4 POSN., RCPT	SILICONE	LARANJA / ORANGE
1	3	CONECTOR POSITION ASSURACE	PA 6.6 +30%FV.	AMARELO / YELLOW
1	2	SPACER, 4 POSN., RCPT.	PA 6.6 +15%FV.	AMARELO / YELLOW
1	1	HOUSING, 4 POSN., RCPT.	PA 6.6 +30%FV.	PRETO / BLACK
-1				
1480968				

THIS DRAWING IS A CONTROLLED DOCUMENT.

DIMENSIONS: mm

TOLERANCES UNLESS OTHERWISE SPECIFIED:
0 PLC ±-
1 PLC ±0,3
2 PLC ±-
3 PLC ±-
4 PLC ±-
ANGLES ±1°

MATERIAL -/- FINISH -/-

DWN M.R.BRIZ 20AUG2002
CHK P.L.FARIA 20AUG2002
APVD L.W.PRADO 20AUG2002
PRODUCT SPEC -
APPLICATION SPEC -
WEIGHT -

TE Connectivity

NAME HOUSING ASSY., 4 POSITION SENSOR FLAT, RECEPTACLE
-

SIZE	CAGE CODE	DRAWING NO	RESTRICTED TO
A3	00779	C-1480968	-

CUSTOMER DRAWING | SCALE 2:1 | SHEET 1 OF 1 | REV F

Mouser Electronics

Authorized Distributor

Click to View Pricing, Inventory, Delivery & Lifecycle Information:

TE Connectivity:

1480968-1