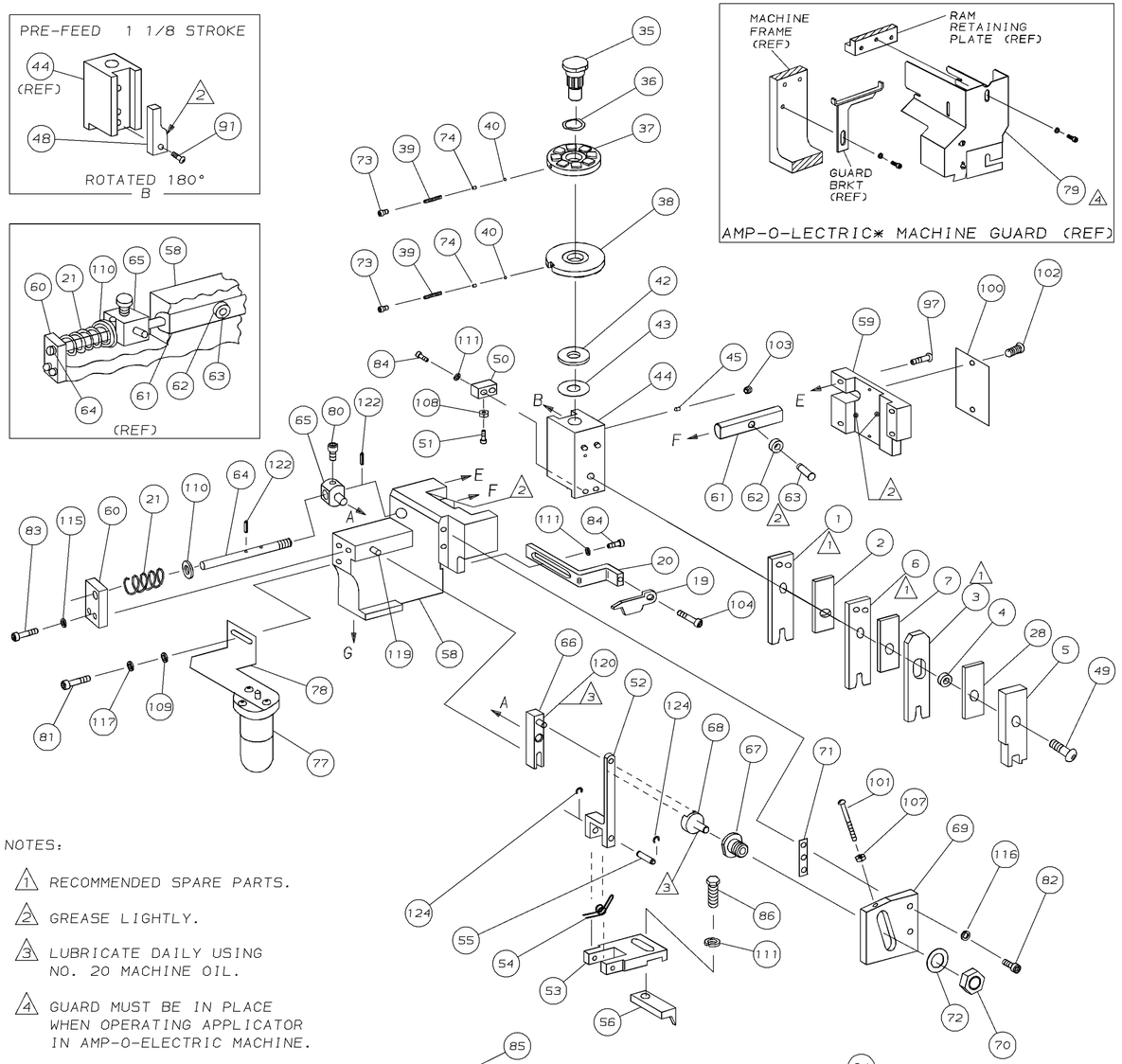

NOTES:

1. RECOMMENDED SPARE PARTS.
2. GREASE LIGHTLY.
3. LUBRICATE DAILY USING NO. 20 MACHINE OIL.
4. GUARD MUST BE IN PLACE WHEN OPERATING APPLICATOR IN AMP-O-ELECTRIC MACHINE.
5. ITEMS WITH QTY OF REF SPECIFIED (EXCEPT ITEM 79) ARE USED ON ITEM 46.

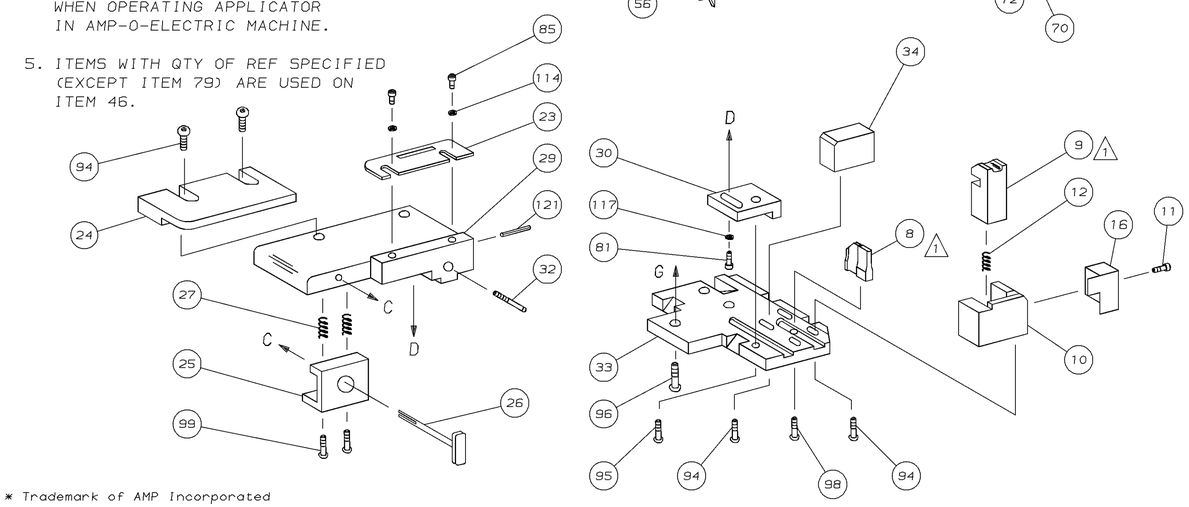

QTY	PART NO	DESCRIPTION	ITEM NO
REF	21045-3	RING,RET "C"(.187ø)FEED FINGER PIN	124
			123
REF	5-21028-1	PIN,SLT SPR(.125øx.50)ADJ ROD	122
1	4-21028-0	PIN,SLT SPR(.093øx.75)ST GUIDE PL	121
REF	1-21030-1	PIN,DOWEL(.187øx.50)LEVER	120
REF	1-21030-6	PIN,DOWEL(.187øx1.25)HOUSING	119
			118
2	21024-5	WASHER,LOCK(NO.10)ADJ BLOCK	117
REF	21024-5	WASHER,LOCK(NO.10)ADJ PLATE	116
REF	21024-5	WASHER,LOCK(NO.10)FEED GUIDE ROD	115
2	21024-2	WASHER,LOCK(NO.4)FRONT STRIP GUIDE	114
			113
			112
4	21024-4	WASHER,LOCK(NO.8)STRIPPER	111
REF	21899-4	WASHER,FLAT(5/16 DIA)SCREW ADJ	110
1	21899-2	WASHER,FLAT(NO.10)LUB ASSY	109
1	21018-5	NUT,HEX(NO.6)HOLDDOWN	108
REF	21018-5	NUT,HEX(6-32)FEED ADJ	107
			106
			105
1	456567-1	SCR,SHLD(.188øx.125)STRIPPER	104
1	21009-2	SCR,SKT SET(1/4-20x.25LOC-WEL)RAM	103
2	21017-2	SCR,DRIVE(#2x.19)ID PLATE	102
REF	6-23715-5	SCR,PAN HD(6-32x1.50)FEED ADJ	101
1	461264-1	PLATE, IDENTIFICATION	100
2	2-21002-9	SCR,BHC(10-32x.75)DRAG	99
1	22733-8	SCR,BHC(8-32x.38LOC-WEL)ANVIL	98
REF	2-21002-9	SCR,BHC(10-32x.75)CAP	97
REF	2-22733-8	SCR,BHC(1/4-20x.62)HOUSING	96
REF	2-21002-7	SCR,BHC(10-32x.50)SG ADJ BLOCK	95
6	2-21002-2	SCR,BHC(8-32x.50)SHEAR	94
			93
			92
1	1-21002-7	SCR,BHC(6-32x.38)CAM	91
			90
			89
			88
			87
1	2-22603-0	SCR,HEX HEAD(8-32x.31)FEED FINGER	86
2	1-21000-3	SCR,SKT CAP(4-40x.25)F STRIP GUIDE	85
3	2-21000-7	SCR,SKT CAP(8-32x.50)STRIPPER	84
REF	3-21000-7	SCR,SKT CAP(10-32x.75)FEED ROD GD	83
REF	3-21000-6	SCR,SKT CAP(10-32x.62)FEED ADJ BLK	82
2	3-21000-4	SCR,SKT CAP(10-32x.38)SG ADJ BL	81
REF	3-21000-4	SCR,SKT CAP(10-32x.38)PIVOT BLOCK	80
REF	449755-1	GUARD WINDOW △4	79
1	1-465184-0	LUBRICATOR ASSY	78
1	22014-1	OIL, SYNTHETIC	77
			76
			75
2	690603-1	SPRING, ASSIST	74
2	23030-1	SCR,SKT CAP(6-32x.25)CP DISC	73
REF	458109-1	WASHER, SPECIAL	72
REF	690517-1	SPACER	71
REF	22594-8	NUT, HEX	70
REF	240628-1	PLATE, ADJUSTMENT	69
REF	240626-1	SHAFT, PIVOT	68
REF	240633-1	BUSHING	67
REF	455680-1	LEVER, INTERMEDIATE	66
REF	240629-1	BLOCK, PIVOT	65
REF	240632-2	SCREW, ADJUSTMENT FEED ROD	64
REF	240659-3	PIN, CAM ROLLER	63
REF	240658-1	ROLLER, CAM	62
REF	454398-2	ROD, FEED	61
REF	454178-1	GUIDE, FEED ROD	60

QTY	PART NO	DESCRIPTION	ITEM NO
REF	454220-1	CAP, HOUSING	59
REF	454485-1	HOUSING	58
			57
1	690542-2	PAWL, FEED	56
REF	240624-1	PIN, FEED FINGER	55
REF	691499-1	SPRING, FEED FINGER	54
REF	690541-1	FINGER, FEED	53
REF	455679-1	LEVER, TERMINAL FEED ARM	52
1	811242-2	BUMPER, HOLDDOWN	51
1	690753-1	SPACER, TONKER	50
1	7-21002-9	BOLT, CRIMPER(5/16-24x1.00)	49
1	690602-5	CAM, PRE-FEED 1 1/8 STROKE	48
			47
1	459456-1	APPLICATOR, BASIC (SUBASSY)	46
1	690191-1	PLUG, NYLON	45
1	455673-1	RAM	44
1	690125-1	WASHER, LAMINATED	43
1	690124-1	WASHER, RAM	42
			41
2	23241-6	BALL, STEEL	40
2	690170-1	SPRING, COMPRESSION	39
1	690142-1	DISC, INSULATION	38
1	2-692155-1	DISC, WIRE	37
1	22480-5	WASHER, SPRING	36
1	690212-1	POST, RAM	35
1	690786-3	SUPPORT, TERMINAL	34
REF	455675-1	PLATE, BASE	33
1	690432-3	SCREW, ADJUSTMENT	32
			31
REF	455689-1	BLOCK, STRIP GUIDE ADJ	30
1	455671-1	PLATE, STRIP GUIDE	29
1	455888-6	SPACER, FRONT SHEAR DEP	28
2	1-22284-0	SPRING, DRAG	27
1	690546-1	LEVER, DRAG RELEASE	26
1	240792-1	DRAG, STOCK	25
1	9-690504-4	GUIDE, STRIP (REAR)	24
1	690438-1	GUIDE, STRIP (FRONT)	23
			22
REF	4-22284-9	SPRING, FEED RETURN	21
1	458950-1	ARM, STRIPPER	20
1	458949-1	STRIPPER	19
			18
			17
1	691667-1	GUARD, CHIP (FRONT)	16
			15
			14
			13
1	5-22280-0	SPRING, SHEAR	12
1	690461-1	STOP, SHEAR	11
1	690459-1	HOLDER, SHEAR (FRONT)	10
1	454276-1	SHEAR, FLOAT (FRONT) △1	9
1	854014-5	ANVIL △1	8
1	455888-1	SPACER, CRIMPER	7
1	461679-5	CRIMPER, STABILIZER	6
1	1-455889-4	DEPRESSOR, SHEAR (FRONT)	5
1	238011-7	SPACER, TUBULAR	4
1	456134-5	CRIMPER, INSULATION △1	3
1	455888-7	SPACER, CRIMPER	2
1	3-456406-0	CRIMPER, WIRE △1	1

CRIMPING DATA

PAD LTR	CRIMP HEIGHT	WIRE SIZE	WIRE STRIP LENGTH
A	.059	16	
B	.053	18	
C	.048	20	
D	NOT	USED	

CRIMP	SIZE	TYPE	FEED	APPL INST
WIRE	.090	F	.472	AI 8040
INSUL	.130	F		

WIRE RANGE	INSULATION RANGE	MACHINE NO
20-16	.079-.114	565435-5

REMARKS

AMP-O-LECTRIC
PRE-FEED

APPLICATOR WILL APPLY
170353-1
170353-2

REMARKS		NO	REV
		TO APPLY TERMINAL	
APPL USED ON MACHINE PART NO	MACH SERIAL NO	DISTRIBUTION	
CUSTOMER NAME	APPL SERIAL NO	ORIGINAL	
ADDRESS	PURCHASE ORDER	CUSTOMER COPY	
CITY	ENG APP	FIELD ENG COPY	

P	F	LTR	REVISION RECORD	APP	DATE	P	F	LTR	REVISION RECORD	APP	DATE	P	F	LTR	REVISION RECORD	APP	DATE
														A	0150-6587-96	TB	1/96

SET UP GAGE 458637-1 | 10-1 L1387
DR 8/11/90 P.MATHIAS | APP 9-20-90 BA WOLFE
CHK 9-20-90 C. ERISMAN | REL 9-20-90 B. MCPHERSON

AMP | AMP INCORPORATED Harrisburg, Pa.

LOC A | D | NO 567379-2 | REV A

NAME MINIATURE QUICK CHANGE APPLICATOR
SIDE FEED (PULSE LOCK CONTACT)

THIS DRAWING IS A CONTROLLED DOCUMENT FOR AMP INCORPORATED. IT IS SUBJECT TO CHANGE AND THE CONTROLLING ENGINEERING ORGANIZATION SHOULD BE CONTACTED FOR THE LATEST REVISION.

THIS INFORMATION IS CONFIDENTIAL AND IS DISCLOSED TO YOU ON CONDITION THAT NO FURTHER DISCLOSURE IS MADE BY YOU TO OTHER THAN AMP PERSONNEL WITHOUT WRITTEN AUTHORIZATION FROM AMP INCORPORATED, HARRISBURG, PA.

DIST 66

* Trademark of AMP Incorporated

Mouser Electronics

Authorized Distributor

Click to View Pricing, Inventory, Delivery & Lifecycle Information:

TE Connectivity:
567379-2