THIS DRAWING IS UNPUBLISHED. RELEASED FOR PUBLICATION 2006
© COPYRIGHT 2006 BY - ALL RIGHTS RESERVED.

REVISIONS

P	LTR	DESCRIPTION	DATE	DWN	APVD
	A2	PN3-2; 5-2; 6-2 OBSOLETE Eg00-1426-03	15.05.03	SR	SM
	A3	ECR-09-005436	11MAR2010	VG	MH
	A4	ECR-16-016696	18AUG2017	GCM	MKO

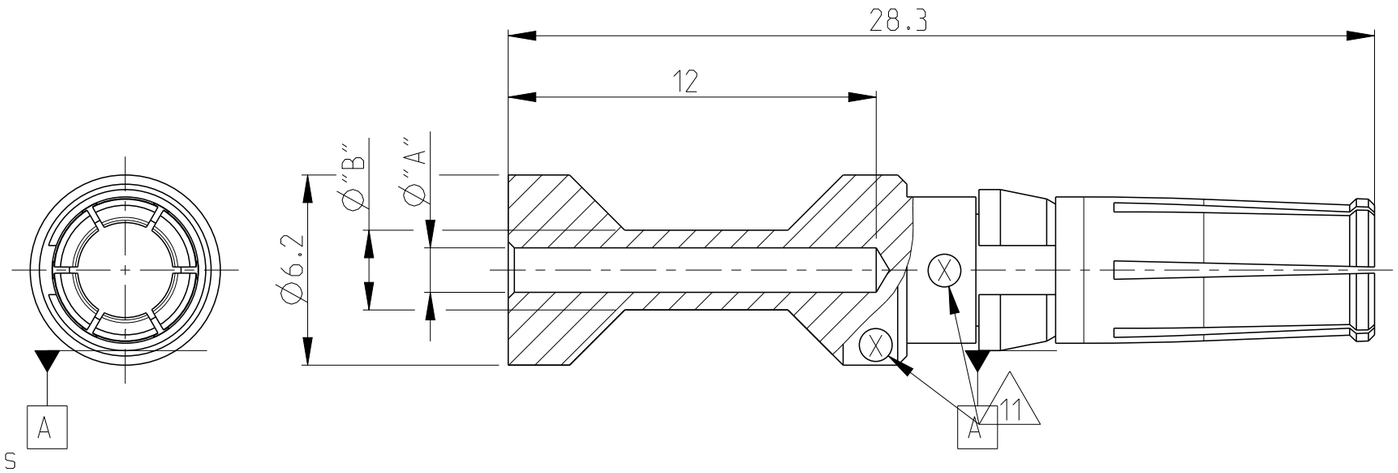

Notes

1. MATERIAL: BRASS
2. FINISH SILVER PLATING: 2 µm Ag MIN. OVER Cu
3. FINISH GOLD PLATING: 0.75 µm Au MIN. OVER Ni
4. NO VENTILATION HOLE REQUIRED AT CROSS-SECTION >4.0 MM²
5. WEIGHT: 2.8 g, VOLUME: 324mm² (APPROX.)
6. SUITABLE PIN CONTACT: CUSTOMER DRAWING 1105251
7. SUITABLE INSERTS: SERIES HSM, CUSTOMER DRAWING
8. SUITABLE CRIMP TOOL: PN 1-1105850-8
9. SUITABLE INSERTION TOOL: PN 0-1102855-6
10. SUITABLE EXTRACTION TOOL: PN 0-1102855-4
11. CROSS-SECTION MARKING
12. STANDARDS: DIN EN 61984, DIN EN 60664-1

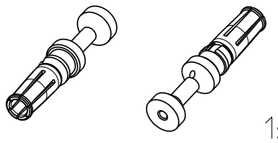

1:1

ORDERING TEXT	PLATING	CROSS SECTION [MM²]	DIMENSIONS "A"	DIMENSIONS "B"	CROSS-SECTION MARKINGS (11)	STRIPPING-LENGTH [mm]
OBSOLETE ~~HSM.Bu.C.Au 10.0mm²~~	GOLD (3)	~~10~~	~~4.35~~	~~5.9~~	~~8~~	~~12~~
OBSOLETE ~~HSM.Bu.C.Au 6.0mm²~~		~~6.0~~	~~3.5~~	~~4.9~~	~~7~~	~~12~~
OBSOLETE ~~HSM.Bu.C.Au 4.0mm²~~		4.0	2.85	3.9	6	12
OBSOLETE ~~HSM.Bu.C.Au 2.5mm²~~		~~2.5~~	~~2.2~~	~~3.2~~	~~5~~	~~12~~
OBSOLETE ~~HSM.Bu.C.Au 1.5mm²~~		~~1.5~~	~~1.8~~	~~3.0~~	~~4~~	~~12~~
OBSOLETE ~~HSM.Bu.C.Au 0.75mm²~~		0.75-1.0	1.45	2.6	3	12
HSM.Bu.C.Ag 10.0mm²	SILBER (2)	10	4.35	5.9	8	12
HSM.Bu.C.Ag 6.0mm²		6.0	3.5	4.9	7	12
HSM.Bu.C.Ag 4.0mm²		4.0	2.85	3.9	6	12
HSM.Bu.C.Ag 2.5mm²		2.5	2.2	3.2	5	12
HSM.Bu.C.Ag 1.5mm²		1.5	1.8	3.0	4	12
HSM.Bu.C.Ag 0.75mm²		0.75-1.0	1.45	2.6	3	12

PARTS LIST

THIS DRAWING IS A CONTROLLED DOCUMENT.

DIMENSIONS: mm

TOLERANCES UNLESS OTHERWISE SPECIFIED:
0 PLC ±
1 PLC ±
2 PLC ±
3 PLC ±
4 PLC ±
ANGLES ±0.5°

MATERIAL (1)

FINISH (2) (3)

DWN K.SCHROEDER 03APR2008
CHK H.BRAUN 03APR2008
APVD T.SCHNURPFEIL 03APR2008
PRODUCT SPEC
APPLICATION SPEC
WEIGHT

TE Connectivity

NAME SOCKET CONTACT SERIES HSM

SIZE	CAGE CODE	DRAWING NO	RESTRICTED TO
A3	00779	C-1105251	-

CUSTOMER DRAWING

SCALE 5:1 SHEET 1 OF 1 REV A4

Mouser Electronics

Authorized Distributor

Click to View Pricing, Inventory, Delivery & Lifecycle Information:

TE Connectivity:

1-1105251-2