THIS DRAWING IS UNPUBLISHED. RELEASED FOR PUBLICATION 20
© COPYRIGHT 20 BY TYCO ELECTRONICS CORPORATION. ALL RIGHTS RESERVED.

SET UP GAGE 458637-3

LOC	DIST
A	66

REVISIONS

P	LTR	DESCRIPTION	DATE	DWN	APVD
	B	SEE EC-07-022403	19SEPT2007	CMR	GB

PART NUMBER	REV	TERMINATOR	FEED TYPE	DESCRIPTION
1528568-1	B	LEADMAKER	MECH POST FEED	CUTS CARRIER
1528568-2	B	BENCH	MECH PRE FEED	CUTS CARRIER
1528568-6	B	LEADMAKER	MECH POST FEED	CONTINUOUS CARRIER
7-1528568-1	B	LEADMAKER	MECH POST FEED	-1 AND SPARE PARTS
7-1528568-2	B	BENCH	MECH PRE FEED	-2 AND SPARE PARTS
7-1528568-6	B	LEADMAKER	MECH POST FEED	-6 AND SPARE PARTS
7-1528568-7	A	-	-	SPARE PARTS KIT

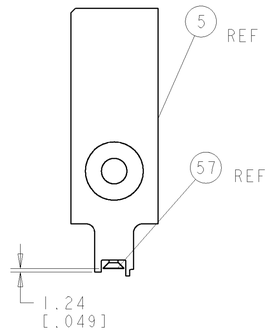

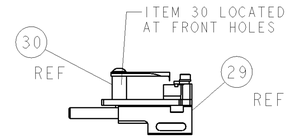

FEED TRACK POSITION
GUIDE BY INS. BARREL

TERMINAL SUPPORT
LOCATION

CRIMP DATA	KOSTAL TERMINAL		KOSTAL CRIMP SPEC
TERMINAL NAME: SLK 2.8 RECEPTACLE SWS			
CRIMP	SIZE	TYPE	RANGE
WIRE	1.57 [.062 IN]	F	0.22-0.50mm² or 24-22 AWG
INSUL	3.56 [.140 IN]	O	1.10-1.70mm [.043-.067 IN] △4
WIRE STRIP LENGTH 4.00-4.60mm [.157-.181 IN]			APPL INSTRUCTIONS 408-8322 & 408-8490
TERMINAL APPL SPEC	KOSTAL DATA SHEETS SLK2.8SWS FLRY & AWG		FEED 13.00 [.512 IN]

TERMINALS APPLIED

TYCO PN	MANUF PN	MFR SEAL PN	TYCO SEAL PN
1572791-1	22124492050	10800472631	1572281-2
1572791-2	22140492050	10800444522	957402-1
-	-	-	-
-	-	-	-

WIRE SIZE	CRIMP HEIGHT *	REF SETTING *
0.50mm²	1.12 ±0.05 [.044 ±.002 IN]	B0
0.35mm² or 22 AWG	1.08 ±0.05 [.043 ±.002 IN]	B3
0.25mm²	1.05 ±0.05 [.041 ±.002 IN]	B6
0.22mm² or 24 AWG	1.03 ±0.05 [.041 ±.002 IN]	B7
-	-	-
-	-	-
-	-	-
-	-	-
-	-	-
-	-	-
-	-	-
-	-	-

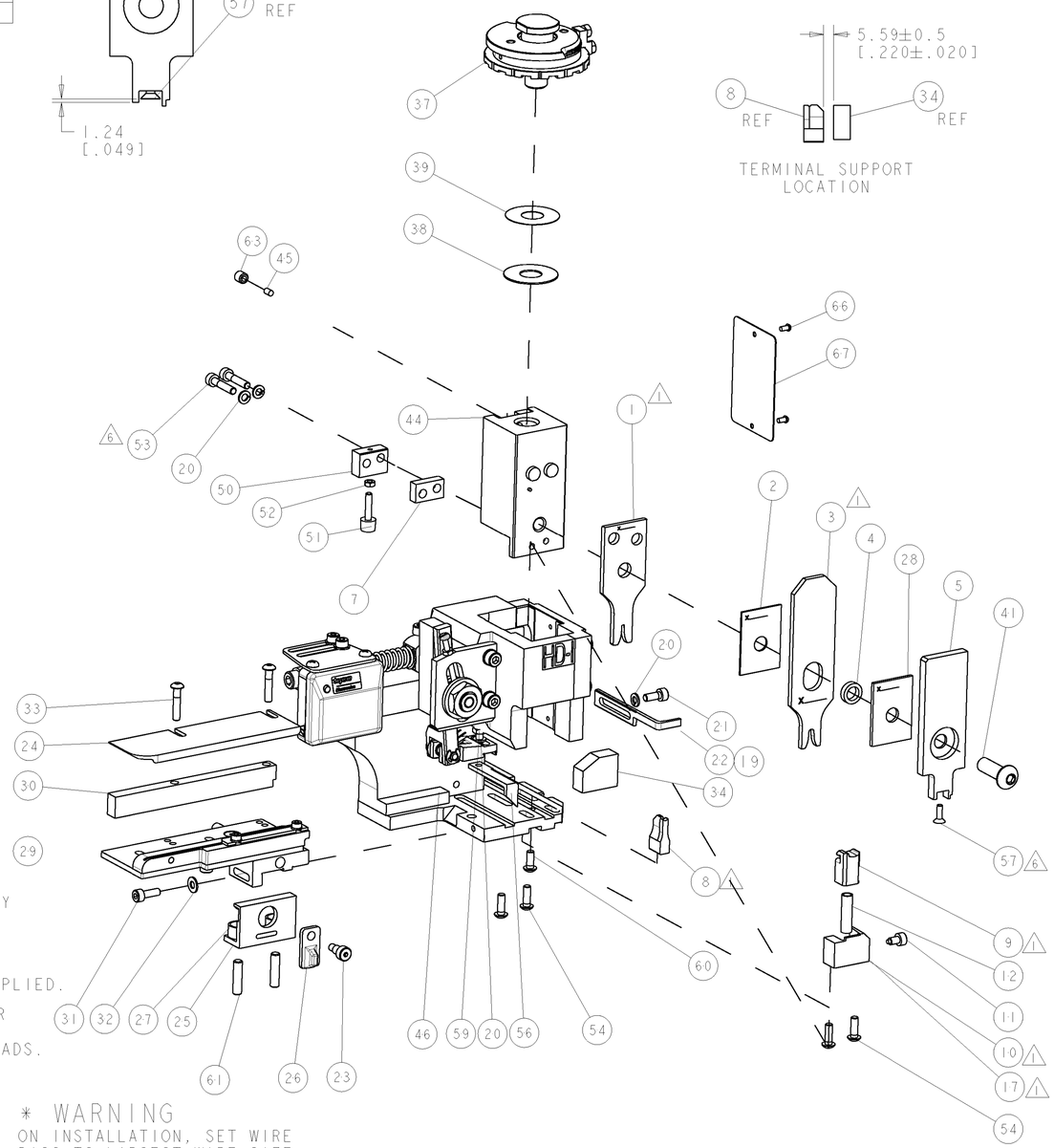

△1 RECOMMENDED SPARE PARTS)
2. GREASE RAM, CAM, CAM FOLLOWER AND FEED ROD LIGHTLY
3. LUBRICATE DAILY PER THE APPLICATOR INSTRUCTION SHEET SUPPLIED WITH THE APPLICATOR

△4 THIS APPLICATOR APPLIES TERMINAL WITH A SEAL. WIRE INSULATION DIA IS DEPENDENT ON SEAL BEING APPLIED.

△5 APPLY TORQ-SEAL IN ALLEN SOCKET TO FILL HOLE AFTER FLAT HD HAS BEEN ADJUSTED TO CORRECT HEIGHT AT QUALIFICATION. APPLY #1-23419-5 LOC-TITE TO THREADS.

△6 CUT TO LENGTH AT ASSEMBLY.

* WARNING
ON INSTALLATION, SET WIRE DISC TO LARGEST WIRE SIZE SETTING. USE OF SETTINGS BELOW MIN. REQUIRED CRIMP HEIGHT SETTING WILL CAUSE DAMAGE TO CRIMP TOOLING.

VIEW B ROTATED 180°

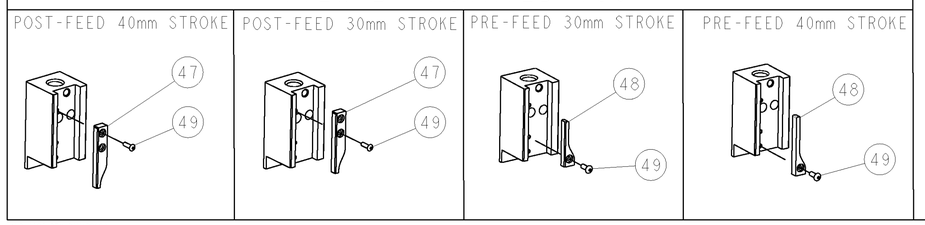

-77	-76	-72	-71	-6	-2	-1	PART NO	DESCRIPTION	ITEM NO
-	-	-	-	-	-	-	-	-	73
-	-	-	-	-	-	-	-	-	72
-	1	1	1	1	1	1	1338705-3	DOCUMENTATION PACKAGE	71
-	-	-	-	-	-	-	-	-	70
-	-	-	-	-	-	-	-	-	69
-	-	-	-	-	-	-	-	-	68
-	1	1	1	1	1	1	461264-5	PLATE, IDENTIFICATION	67
-	2	2	2	2	2	2	21017-2	SCREW, DRIVE	66
-	-	-	-	-	-	-	-	-	65
-	-	-	-	-	-	-	-	-	64
-	1	1	1	1	1	1	3-18031-0	SCR, SET, CUP POINT M6 X 6.0	63
-	-	-	-	-	-	-	-	-	62
-	2	2	2	2	2	2	2-18032-5	SCR, SET, FLT POINT M5 X 20.0	61
-	1	1	1	1	1	1	18024-7	SCR, BTN SKT HD CAP (M4 X 10.0)	60
-	1	1	1	1	1	1	5-18022-2	SCR, HEX HD CAP M4 X 8.0	59
-	-	-	-	-	-	-	-	-	58
-	1	1	1	1	1	1	985575-3	SCR, FLT SKT HD CAP M3 X 10.0	57
-	1	1	1	1	1	1	1338685-1	PAWL, FEED	56
-	-	-	-	-	-	-	-	-	55
-	4	4	4	4	4	4	18024-8	SCR, BTN SKT HD CAP (M4 X 12.0)	54
△6 -	2	2	2	2	2	2	1-18023-4	SCR, SKT HD CAP M4 X 20.0	53
-	1	1	1	1	1	1	18030-1	NUT, HEX, REG M3	52
-	1	1	1	1	1	1	811242-5	BUMPER, HOLD DOWN	51
-	1	1	1	1	1	1	690753-2	SPACER, TONKER	50
-	1	1	1	1	1	1	18024-3	SCR, BTN SKT HD CAP (M3 X 10.0)	49
-	-	1	-	-	1	-	1338675-1	CAM, UNIVERSAL PRE FEED	48
-	1	-	1	1	-	-	1338676-1	CAM, UNIVERSAL POST-FEED	47
-	1	1	1	1	1	1	1320999-3	APPLICATOR SUBASSEMBLY, HDI	46
-	1	1	1	1	1	1	690191-1	PLUG,NYLON	45
-	1	1	1	1	1	1	1338660-1	RAM	44
-	-	-	-	-	-	-	-	-	43
-	-	-	-	-	-	-	-	-	42
-	1	1	1	1	1	1	2-18024-6	SCR, BTN SKT HD CAP (M8 X 25.0)	41
-	-	-	-	-	-	-	-	-	40
-	1	1	1	1	1	1	690125-1	SHIM SUB-ASSY	39
-	1	1	1	1	1	1	469367-8	SHIM	38
-	1	1	1	1	1	1	879103-2	FINE ADJUST HEAD SUBASSY	37
-	-	-	-	-	-	-	-	-	36
-	-	-	-	-	-	-	-	-	35
-	1	1	1	1	1	1	1320934-1	SUPPORT, TERMINAL	34
-	2	2	2	2	2	2	1-18024-0	SCR, BTN SKT HD CAP (M4 X 20.0)	33
-	1	1	1	1	1	1	18027-2	WASHER, FLAT, REG M4	32
-	1	1	1	1	1	1	1-18023-2	SCR, SKT HD CAP M4 X 12.0	31
-	1	1	1	1	1	1	1320908-1	SPACER, STRIP GUIDE	30
-	1	1	1	1	1	1	1633073-2	STRIP GUIDE ASSEMBLY	29
-	1	1	1	1	1	1	1-455888-7	SPACER, CRIMPER	28
-	2	2	2	2	2	2	1-22284-0	SPRING, COMPRESSION	27
-	1	1	1	1	1	1	356835-1	LEVER, DRAG RELEASE	26
-	1	1	1	1	1	1	240792-1	DRAG, TERMINAL	25
-	1	1	1	1	1	1	1320928-1	PLATE, STRIP GUIDE	24
-	1	1	1	1	1	1	980371-4	SCR, SKT HD SHLDR 5.0 DIA X 6.0	23
-	1	-	1	1	-	1	690472-2	STRIPPER	22
-	1	1	1	1	1	1	1-18023-1	SCR, SKT HD CAP M4 X 10.0	21
-	4	4	4	4	4	4	18025-2	WASHER, SPRG LOCK, REG M4	20
-	-	1	-	-	1	-	690472-1	STRIPPER	19
-	-	-	-	-	-	-	-	-	18
△1 -	1	-	-	1	-	-	1338684-2	HOLDER, SHEAR, NO-CUT	17
-	-	-	-	-	-	-	-	-	16
-	-	-	-	-	-	-	-	-	15
-	-	-	-	-	-	-	-	-	14
-	-	-	-	-	-	-	-	-	13
-	1	1	1	1	1	1	3-22280-3	SPRING, COMPRESSION	12
-	1	1	1	1	1	1	356885-5	STOP, SHEAR	11
△1 -	-	1	1	-	1	1	1-1320921-0	SHEAR HOLDER, FRONT, CUT	10
△1 -	1	1	1	1	1	1	318707-1	FLOATING SHEAR, FRONT	9
△1 1	2	2	2	1	1	1	1633129-3	ANVIL, COMBINATION .062	8
-	1	1	1	1	1	1	1-240641-8	SPACER	7
-	-	-	-	-	-	-	-	-	6
-	1	1	1	1	1	1	1338680-2	DEPRESSOR, SHEAR	5
-	1	1	1	1	1	1	2-238011-1	BLOCK, CRIMPER SPACER	4
△1 1	2	2	2	1	1	1	456135-6	CRIMPER, INSULATION O PREMIUM	3
-	1	1	1	1	1	1	455888-8	SPACER, CRIMPER	2
△1 1	2	2	2	1	1	1	1-456403-5	CRIMPER, WIRE PREMIUM	1

-77	-76	-72	-71	-6	-2	-1	PART NO	DESCRIPTION	ITEM NO
-	-	-	-	-	-	-	-	-	83
-	-	-	-	-	-	-	-	-	82
-	-	-	-	-	-	-	-	-	81
-	-	-	-	-	-	-	-	-	80
-	-	-	-	-	-	-	-	-	79
-	-	-	-	-	-	-	-	-	78
-	-	-	-	-	-	-	-	-	77
-	-	-	-	-	-	-	-	-	76
-	-	-	-	-	-	-	-	-	75
-	-	-	-	-	-	-	-	-	74

THIS DRAWING IS A CONTROLLED DOCUMENT FOR TYCO ELECTRONICS CORPORATION. IT IS SUBJECT TO CHANGE AND THE CONTROLLING ENGINEERING ORGANIZATION SHOULD BE CONTACTED FOR THE LATEST REVISION.

DIMENSIONS: mm [IN]
TOLERANCES UNLESS OTHERWISE SPECIFIED: 0 PLC ±- ; 1 PLC ±- ; 2 PLC ±- ; 3 PLC ±- ; 4 PLC ±- ; ANGLES ±-
MATERIAL - -
FINISH - -

DWN L LOFTHOUSE 05-SEP-05
CHK -
APVD F.BACKHURST 05-SEP-05
PRODUCT SPEC -
APPLICATION SPEC See Table
WEIGHT -

Tyco Electronics
Tyco Electronics
Harrisburg, PA 17105-3608

NAME FINE ADJUST SIDE FEED HDI APPLICATOR

SIZE	CAGE CODE	DRAWING NO	RESTRICTED TO
A1	00779	C-1528568	-

CUSTOMER DRAWING SCALE 3:5 SHEET 1 OF 1 REV B

AMP 4805 REV 31MAR2000

Pro/ENGINEER DRAWING

Mouser Electronics

Authorized Distributor

Click to View Pricing, Inventory, Delivery & Lifecycle Information:

TE Connectivity:

1528568-6