THIS DRAWING IS UNPUBLISHED. RELEASED FOR PUBLICATION - , - .
© COPYRIGHT - By - ALL RIGHTS RESERVED.

LOC	DIST
CM	0

REVISIONS

P	LTR	DESCRIPTION	DATE	DWN	APVD
	C	REVISED PER ECO-12-007807	06AUG12	KH	SM

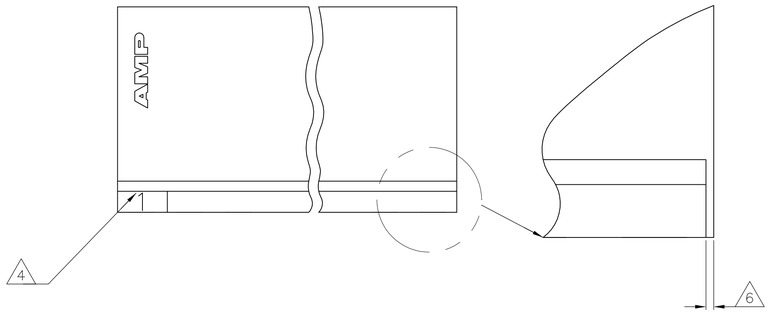

SCALE 10:1

1 UNIT ACCEPTS 1.14 [.045] SQUARE OR ROUND POST.

2 UNIT ACCEPTS STANDARD SL-156 CONTACTS.

3 UNIT ACCEPTS KEYING PLUG 640254-1 AND KEYING PIN 640255-1.

4 CIRCUIT I.D. NUMBER(S),TO BE LOCATED SEQUENTIALLY AS SHOWN OR ONLY NO.1 CIRCUIT PLACED ON LOCKING RAMP.

5 DIMENSIONS IN BRACKETS ARE IN INCHES.

6 OPTIONAL CONSTRUCTION (BOTH CORNERS) UP TO 1.27 [.050].

7 CIRCUIT 2 IS MOLDED CLOSED, USING EITHER OPTION A OR OPTION B.

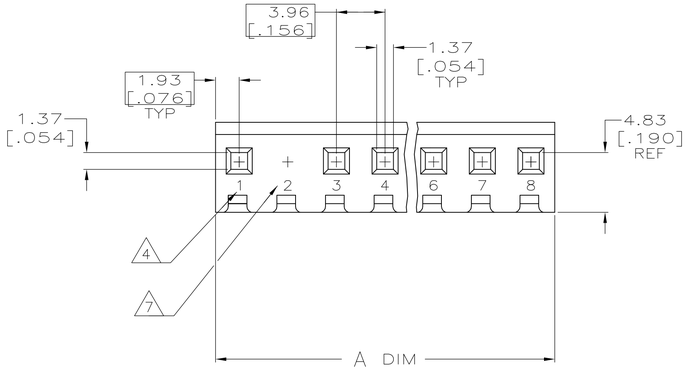

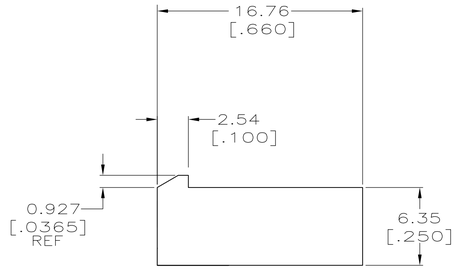

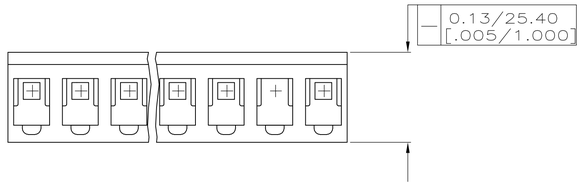

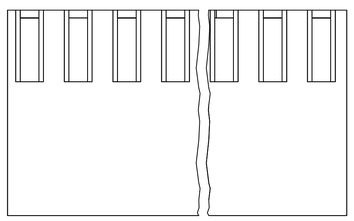

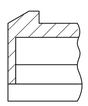

OPTION A

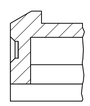

OPTION B

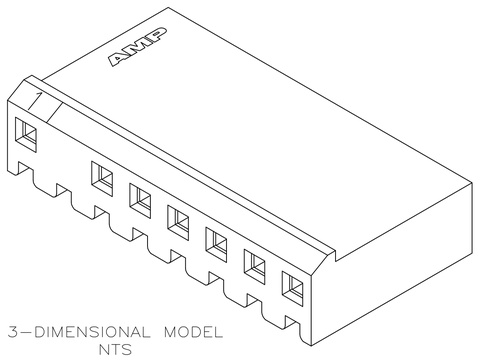

3-DIMENSIONAL MODEL
NTS

	ORANGE	11.81 [.465]	3	9-794115-3
PRELIMINARY, NOT FOR PRODUCTION	NATURAL	75.31 [2.965]	19	1-794115-9
PRELIMINARY, NOT FOR PRODUCTION	NATURAL	29.85 [1.175]	11	1-794115-1
	NATURAL	31.65 [1.246]	8	794115-8
	NATURAL	11.81 [.465]	3	794115-3
	COLOR	A ±0.25 [.010]	NO. OF CIRCUITS	PART NUMBER

THIS DRAWING IS A CONTROLLED DOCUMENT.

DIMENSIONS: mm [INCHES]

TOLERANCES UNLESS OTHERWISE SPECIFIED:
0 PLC ± -
1 PLC ± -
2 PLC ± 0.13 [.005]
3 PLC ± -
4 PLC ± -
ANGLES ± 0°30'

MATERIAL: NYLON, UL 94V-0

FINISH: -

DWN L. McEACHIN 17-MAR-2000
CHK J. ELLIS 17-MAR-2000
APVD J. ELLIS 17-MAR-2000

PRODUCT SPEC —

APPLICATION SPEC —

WEIGHT —

TE Connectivity

NAME: HOUSING WITH LOCKING RAMP, CIRCUIT NO. 2 CLOSED, SL-156

SIZE	CAGE CODE	DRAWING NO	RESTRICTED TO
A1	00779	C-794115	—

CUSTOMER DRAWING | SCALE 4:1 | SHEET 1 OF 1 | REV C

METRIC

Mouser Electronics

Authorized Distributor

Click to View Pricing, Inventory, Delivery & Lifecycle Information:

TE Connectivity:

9-794115-3