THIS DRAWING IS UNPUBLISHED. RELEASED FOR PUBLICATION -
© COPYRIGHT - - ALL RIGHTS RESERVED.

LOC	DIST
A1	–

REVISIONS

P	LTR	DESCRIPTION	DATE	DWN	APVD
	C5	ECR-16-004045	24MAR2016	KD	RR
	C6	ECR-16-010013	19JUL2016	KD	RR
	C7	ECR-16-013486	26SEP2016	KD	RR
	C8	ECR-17-005237	11APR2017	IZ	RR

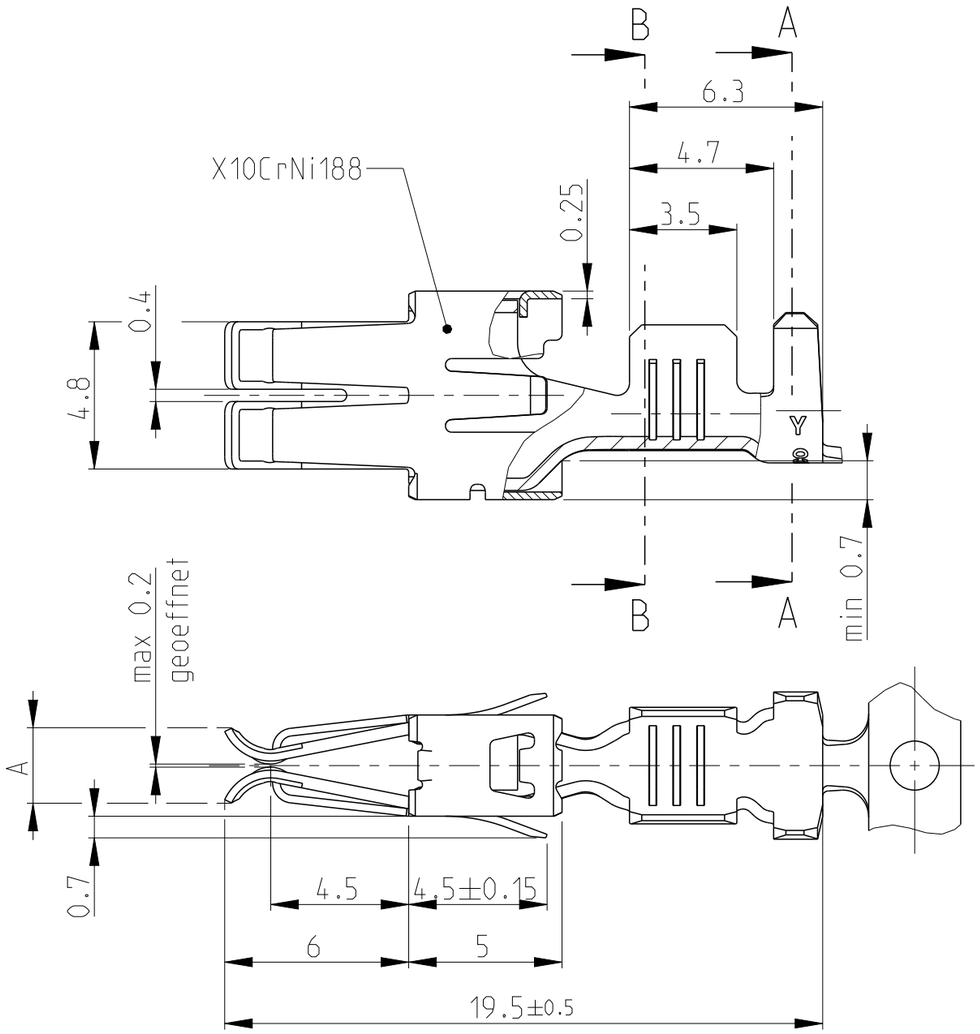

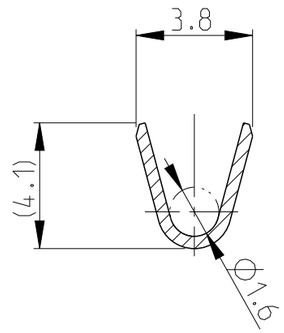

B-B

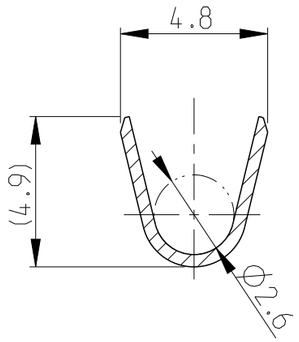

A-A

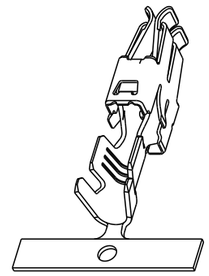

2:1

Notes

1. OBSOLETE
2. PRELIMINARY - NOT RELEASED FOR PRODUCTION
3. CONTACT ZONE SELECTIVE
   PRE SILVER PLATED MIN 1-1.5 µm

INSUL. RANGE Ø2.2-3.0 mm	WIRE RANGE >1-2.5 mm²	A	LP NO	FINISH	MATERIAL	PART NO.	REV
		2.5	1 1241826-5	vorversilbert/PRESILVERED	CuFe2	964203-5	C
		2.5	1 1241826-4	vorversilbert/PRESILVERED 1-1.5 µm	CuSn4	964203-4	C
		2.5	1 1241826-3	vorversilbert/PRESILVERED 3-4.5 µm	CuSN4	964203-3	C
		2.5	1 1241826-2	vorverzinnt/PRETINNED	CuSN4	964203-2	C
		2.5	1 1241826-1	vorverzinnt/PRETINNED	CuFe2	964203-1	C

THIS DRAWING IS A CONTROLLED DOCUMENT.

DIMENSIONS: mm

TOLERANCES UNLESS OTHERWISE SPECIFIED: 0 PLC ±- 1 PLC ±- 2 PLC ±- 3 PLC ±- 4 PLC ±- ±0.2; ANGLES ±1°

MATERIAL -

FINISH -

DWN ATZMANN 06.01.94
CHK BARTOSCH 18.01.94
APVD Bleicher.M. 28.11.07
PRODUCT SPEC 108-18025
APPLICATION SPEC 114-18037
WEIGHT 0.82 g

TE Connectivity

NAME STANDARD POWER TIMER KONTAKT (Gerade Tulpe) -

SIZE	CAGE CODE	DRAWING NO	RESTRICTED TO
A3	00779	C-964203	-

Customer Drawing | SCALE 5:1 | SHEET 1 OF 9 | REV C8

THIS DRAWING IS UNPUBLISHED. RELEASED FOR PUBLICATION -
© COPYRIGHT - - ALL RIGHTS RESERVED.

LOC	DIST

REVISIONS

P	LTR	DESCRIPTION	DATE	DWN	APVD
	-	SEE SHEET 1	-	-	-

ONLY FOR 3-927833-1 & 3-927833-2

OTHER DIMENSIONS SEE SHEET 1

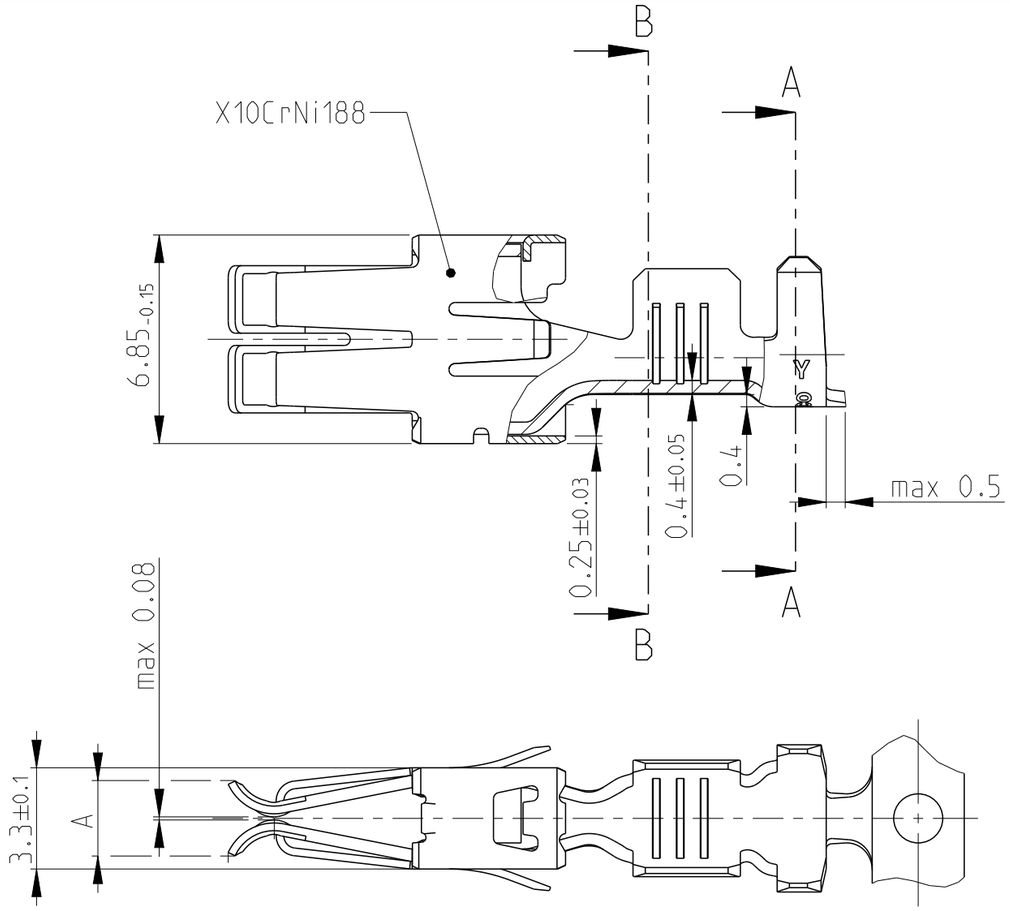

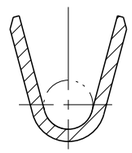

B-B

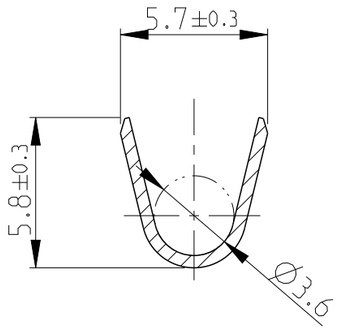

A-A

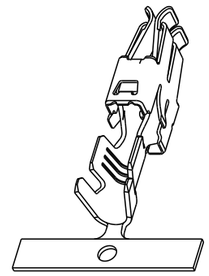

2:1

INSUL. RANGE	WIRE RANGE						
Ø2.7-3.7 mm	>1-2.5 mm 2	2.3±0.15	-	PRETINNED	CuSn4	3-927833-2	A
		2.3±0.15	-	PRETINNED	CuFe2	3-927833-1	A
		A	LP NO	FINISH	MATERIAL	PART NO.	REV

THIS DRAWING IS A CONTROLLED DOCUMENT.

DIMENSIONS: mm

TOLERANCES UNLESS OTHERWISE SPECIFIED:
0 PLC ±- ; 1 PLC ±- ; 2 PLC ±- ; 3 PLC ±- ; 4 PLC ±- : ±0.2
ANGLES ±1°

MATERIAL -

FINISH -

DWN ATZMANN 06.01.94
CHK BARTOSCH 18.01.94
APVD Bleicher.M. 28.11.07
PRODUCT SPEC 108-18025
APPLICATION SPEC 114-18037
WEIGHT ~~0.82 g~~

Customer Drawing

TE Connectivity

NAME STANDARD POWER TIMER KONTAKT
(Gerade Tulpe)
-

SIZE	CAGE CODE	DRAWING NO	RESTRICTED TO
A3	00779	C-964203	-

SCALE 5:1 SHEET 2 OF 9 REV C8

THIS DRAWING IS UNPUBLISHED. RELEASED FOR PUBLICATION -
© COPYRIGHT - - ALL RIGHTS RESERVED.

LOC	DIST

REVISIONS

P	LTR	DESCRIPTION	DATE	DWN	APVD
	-	SEE SHEET 1	-	-	-

ONLY FOR 3-927837-1, 3-927837-2, 3-927837-4 & 3-927837-5

OTHER DIMENSIONS SEE SHEET 1

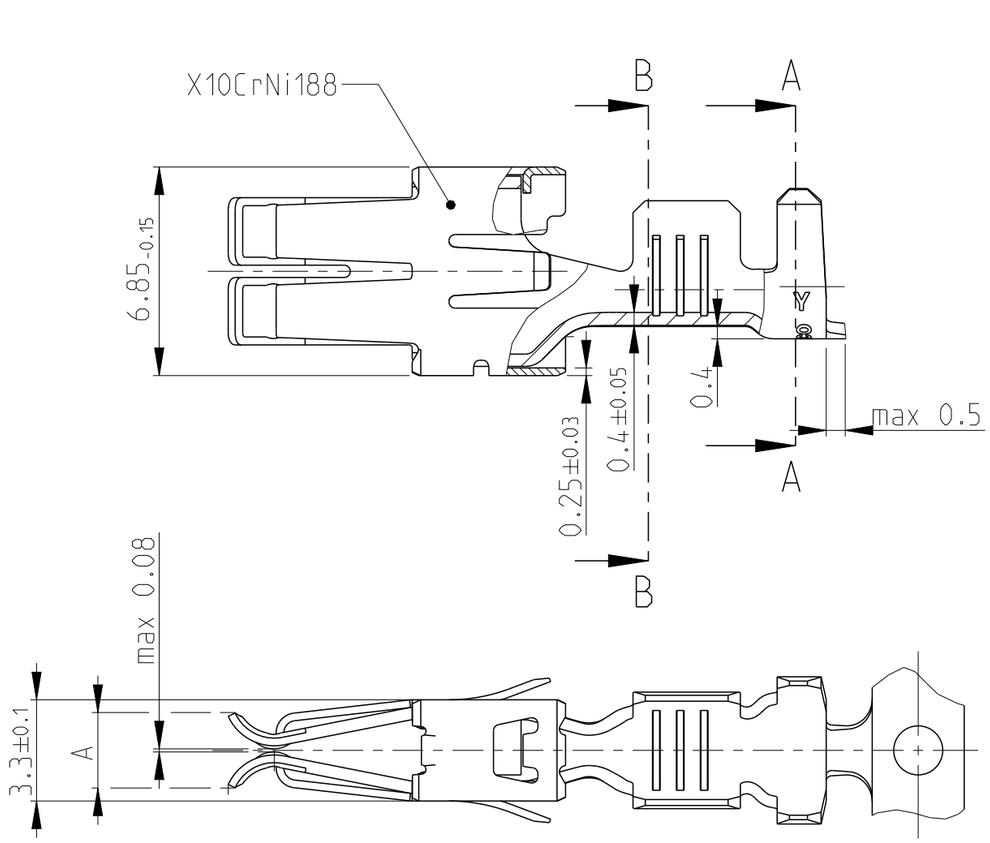

B-B

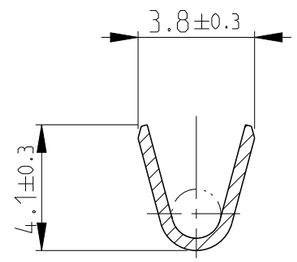

A-A

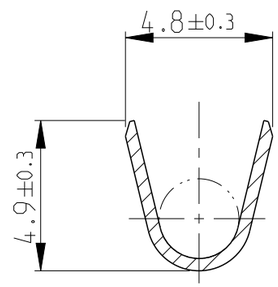

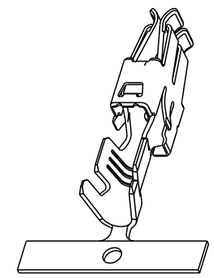

2:1

INSUL. RANGE	WIRE RANGE					
Ø2.2-3.0 mm	>1-2.5 mm²	2.3±0.15	-	PRESILVERED 3	CuFe2	3-927837-5	A
		2.3±0.15	-	PRESILVERED 3	CuSn4	3-927837-4	A
		2.3±0.15	-	PRETINNED	CuSn4	3-927837-2	A
		2.3±0.15	-	PRETINNED	CuFe2	3-927837-1	A
		A	LP NO	FINISH	MATERIAL	PART NO.	REV

THIS DRAWING IS A CONTROLLED DOCUMENT.

DIMENSIONS: mm

TOLERANCES UNLESS OTHERWISE SPECIFIED:
0 PLC ±- 1 PLC ±- 2 PLC ±- 3 PLC ±- 4 PLC ±- ±0.2
ANGLES ±1°

MATERIAL -

FINISH -

DWN ATZMANN 06.01.94
CHK BARTOSCH 18.01.94
APVD Bleicher,M. 28.11.07
PRODUCT SPEC 108-18025
APPLICATION SPEC 114-18037
WEIGHT ~~0.82 g~~

TE Connectivity

NAME STANDARD POWER TIMER KONTAKT (Gerade Tulpe) -

SIZE	CAGE CODE	DRAWING NO	RESTRICTED TO
A3	00779	C-964203	-

Customer Drawing | SCALE 5:1 | SHEET 3 OF 9 | REV C8

THIS DRAWING IS UNPUBLISHED. RELEASED FOR PUBLICATION -
© COPYRIGHT - - ALL RIGHTS RESERVED.

LOC	DIST

REVISIONS

P	LTR	DESCRIPTION	DATE	DWN	APVD
	-	SEE SHEET 1	-	-	-

ONLY FOR 3-927824-1 & 3-927824-2

OTHER DIMENSIONS SEE SHEET 1

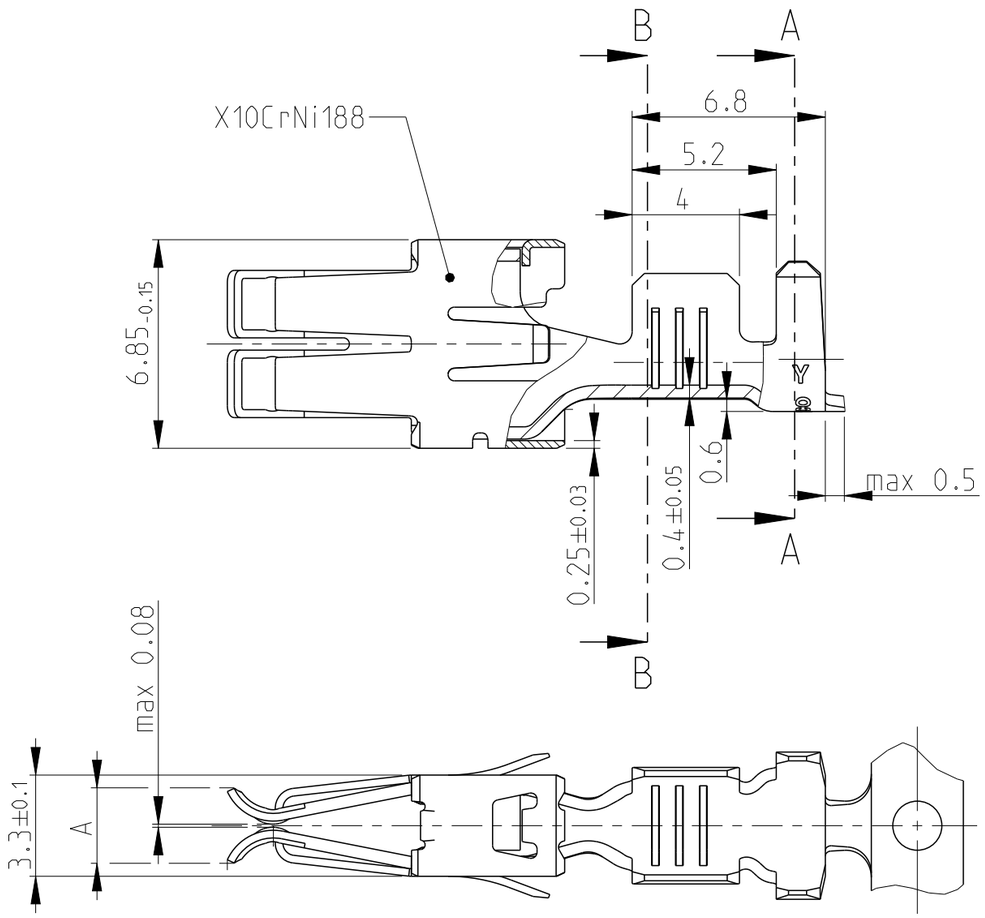

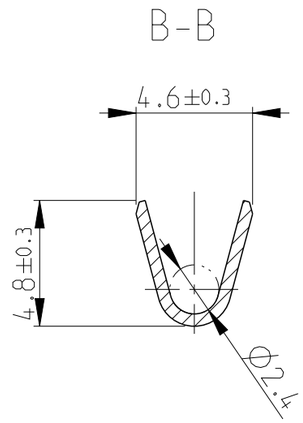

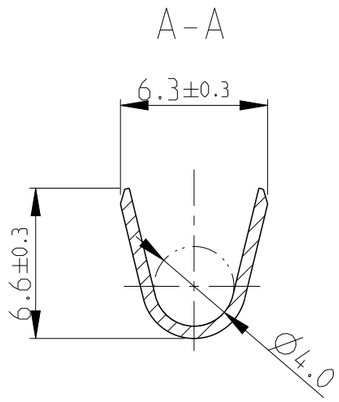

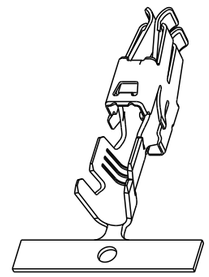

2:1

INSUL. RANGE	WIRE RANGE						
Ø3.3-4.5 mm	>2.5-4.0 >mm 2	2.3±0.15	-	PRETINNED	CuSn4	3-927824-2	A
		2.3±0.15	-	PRETINNED	CuFe2	3-927824-1	A
		A	LP NO	FINISH	MATERIAL	PART NO.	REV

THIS DRAWING IS A CONTROLLED DOCUMENT.

DIMENSIONS: mm

TOLERANCES UNLESS OTHERWISE SPECIFIED:
0 PLC ±-
1 PLC ±-
2 PLC ±-
3 PLC ±-
4 PLC ±-
±0.2
ANGLES ±1°

MATERIAL -

FINISH -

DWN ATZMANN 06.01.94
CHK BARTOSCH 18.01.94
APVD Bleicher.M. 28.11.07
PRODUCT SPEC 108-18025
APPLICATION SPEC 114-18037
WEIGHT ~~0.82 g~~

Customer Drawing

TE Connectivity

NAME STANDARD POWER TIMER KONTAKT
(Gerade Tulpe)
-

SIZE	CAGE CODE	DRAWING NO	RESTRICTED TO
A3	00779	C-964203	-

SCALE 5:1 SHEET 4 OF 9 REV C8

THIS DRAWING IS UNPUBLISHED. RELEASED FOR PUBLICATION -
© COPYRIGHT - - ALL RIGHTS RESERVED.

LOC	DIST

REVISIONS

P	LTR	DESCRIPTION	DATE	DWN	APVD
	-	SEE SHEET 1	-	-	-

ONLY FOR 3-927829-1 & 3-927829-5,

OTHER DIMENSIONS SEE SHEET 1

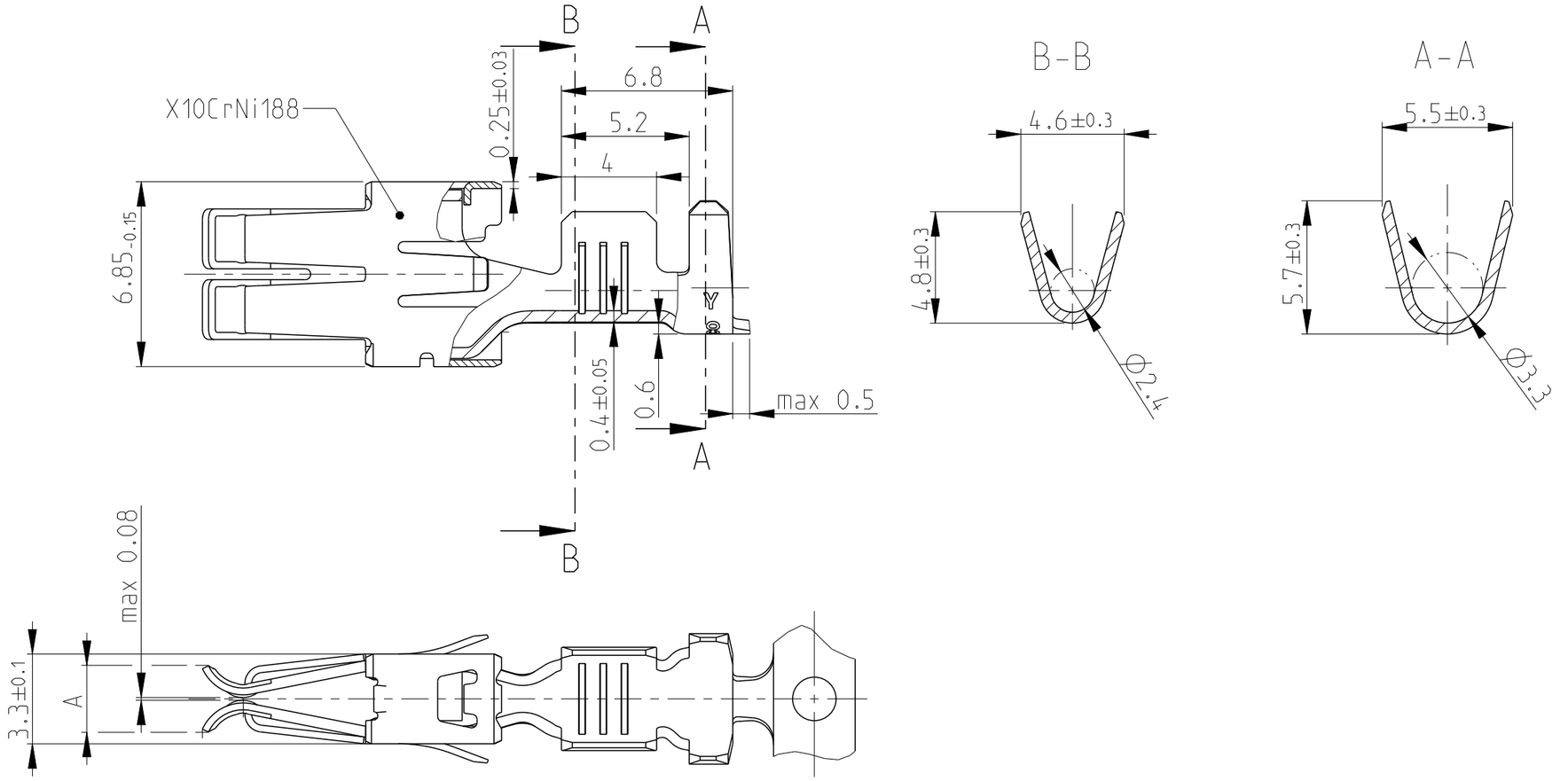

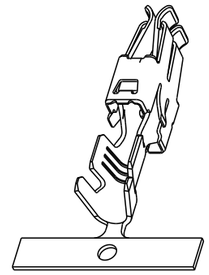

2:1

INSUL. RANGE	WIRE RANGE						
Ø2.7-3.7 mm	>2.5-4.0 mm²	2.3±0.15	-	PRESILVERED △3	CuFe2	3-927829-5	A
		2.3±0.15	-	PRETINNED	CuFe2	3-927829-1	A
		A	LP NO	FINISH	MATERIAL	PART NO.	REV

THIS DRAWING IS A CONTROLLED DOCUMENT.

DIMENSIONS: mm

TOLERANCES UNLESS OTHERWISE SPECIFIED:
0 PLC ±- ; 1 PLC ±- ; 2 PLC ±- ; 3 PLC ±- ; 4 PLC ±- : ±0.2
ANGLES ±1°

MATERIAL -

FINISH -

DWN ATZMANN 06.01.94
CHK BARTOSCH 18.01.94
APVD Bleicher,M. 28.11.07
PRODUCT SPEC 108-18025
APPLICATION SPEC 114-18037
WEIGHT ~~0.82 g~~

Customer Drawing

TE Connectivity

NAME STANDARD POWER TIMER KONTAKT
(Gerade Tulpe)
-

SIZE	CAGE CODE	DRAWING NO	RESTRICTED TO
A3	00779	C-964203	-

SCALE 5:1 SHEET 5 OF 9 REV C8

THIS DRAWING IS UNPUBLISHED. RELEASED FOR PUBLICATION -
© COPYRIGHT - - ALL RIGHTS RESERVED.

LOC	DIST

REVISIONS

P	LTR	DESCRIPTION	DATE	DWN	APVD
	-	SEE SHEET 1	-	-	-

ONLY FOR 3-963709-1

OTHER DIMENSIONS SEE SHEET 1

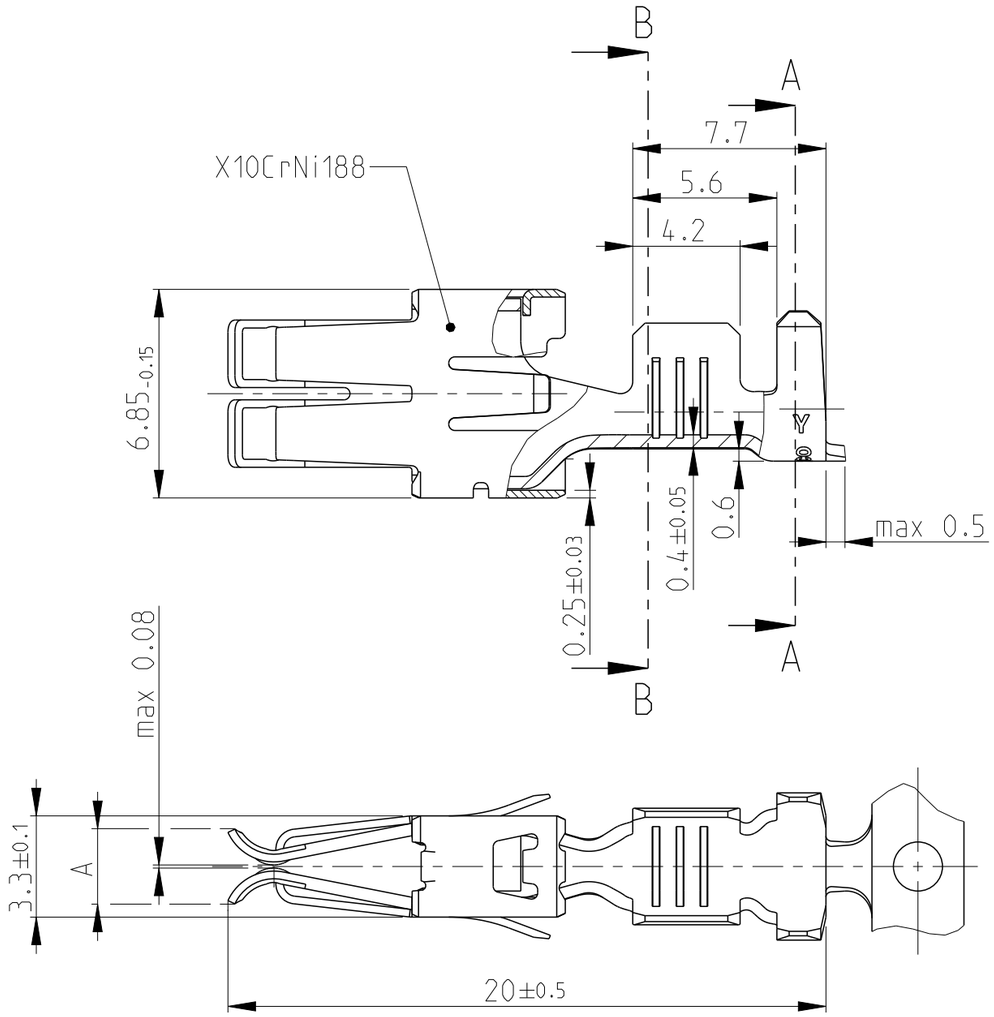

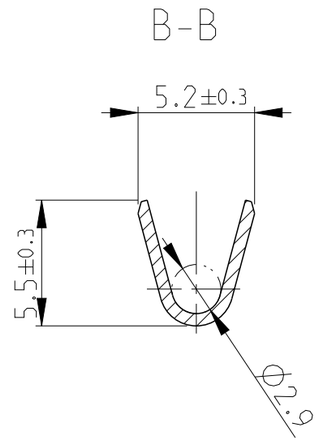

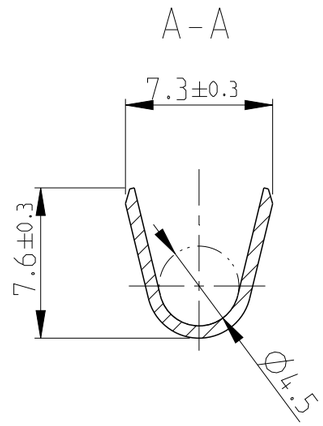

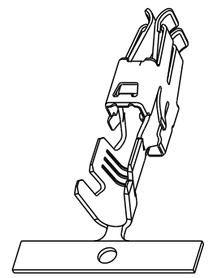

2:1

INSUL. RANGE	WIRE RANGE	2.3±0.15	-	PRETINNED	CuFe2	3-963709-1	A
Ø4.0-5.2 mm	4.0-6.0 mm²	A	LP NO	FINISH	MATERIAL	PART NO.	REV

THIS DRAWING IS A CONTROLLED DOCUMENT.

DIMENSIONS: mm

TOLERANCES UNLESS OTHERWISE SPECIFIED:
0 PLC ±- ; 1 PLC ±- ; 2 PLC ±- ; 3 PLC ±- ; 4 PLC ±- ; ±0.2
ANGLES ±1°

MATERIAL -

FINISH -

DWN ATZMANN 06.01.94
CHK BARTOSCH 18.01.94
APVD Bleicher,M. 28.11.07
PRODUCT SPEC 108-18025
APPLICATION SPEC 114-18037
WEIGHT ~~0.82 g~~

TE Connectivity

NAME STANDARD POWER TIMER KONTAKT
(Gerade Tulpe)
-

SIZE	CAGE CODE	DRAWING NO	RESTRICTED TO
A3	00779	C-964203	-

Customer Drawing

SCALE 5:1 SHEET 6 OF 9 REV C8

THIS DRAWING IS UNPUBLISHED. RELEASED FOR PUBLICATION -
© COPYRIGHT - - ALL RIGHTS RESERVED.

LOC	DIST

REVISIONS

P	LTR	DESCRIPTION	DATE	DWN	APVD
	-	SEE SHEET 1	-	-	-

ONLY FOR 3-964326-1

OTHER DIMENSIONS SEE SHEET 1

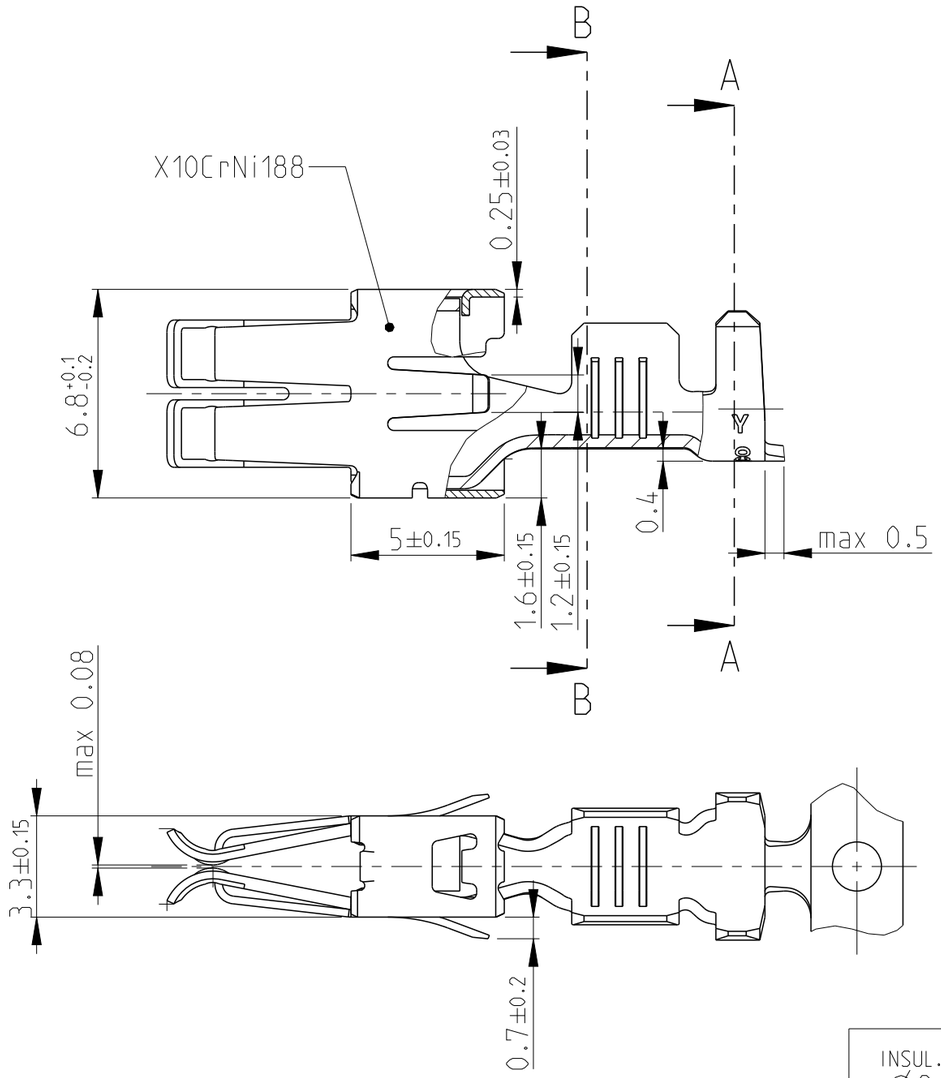

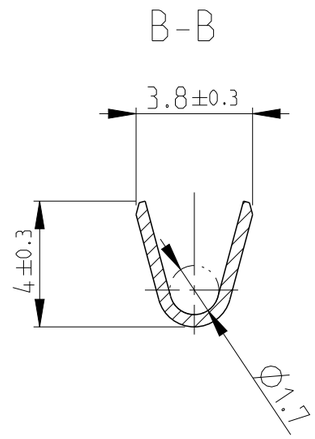

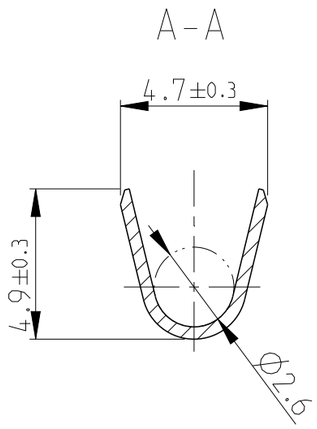

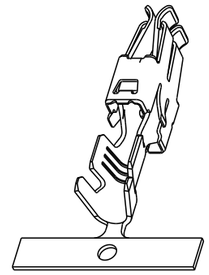

2:1

INSUL. RANGE	WIRE RANGE
Ø2.2-3.0 mm	>1.0-2.5 mm²

-	PRETINNED	CuFe2	3-964326-1	A
LP NO	FINISH	MATERIAL	PART NO.	REV

THIS DRAWING IS A CONTROLLED DOCUMENT.

DIMENSIONS: mm

TOLERANCES UNLESS OTHERWISE SPECIFIED:
0 PLC ±-
1 PLC ±-
2 PLC ±- ±0.2
3 PLC ±-
4 PLC ±-
ANGLES ±1°

MATERIAL -

FINISH -

DWN ATZMANN 06.01.94
CHK BARTOSCH 18.01.94
APVD Bleicher,M. 28.11.07
PRODUCT SPEC 108-18025
APPLICATION SPEC 114-18037
WEIGHT ~~0.82 g~~

TE Connectivity

NAME STANDARD POWER TIMER KONTAKT
(Gerade Tulpe)
-

SIZE	CAGE CODE	DRAWING NO	RESTRICTED TO
A3	00779	C-964203	-

Customer Drawing | SCALE 5:1 | SHEET 7 OF 9 | REV C8

THIS DRAWING IS UNPUBLISHED. RELEASED FOR PUBLICATION -
© COPYRIGHT - - ALL RIGHTS RESERVED.

LOC	DIST

REVISIONS

P	LTR	DESCRIPTION	DATE	DWN	APVD
	-	SEE SHEET 1	-	-	-

ONLY FOR 3-964328-1

OTHER DIMENSIONS SEE SHEET 1

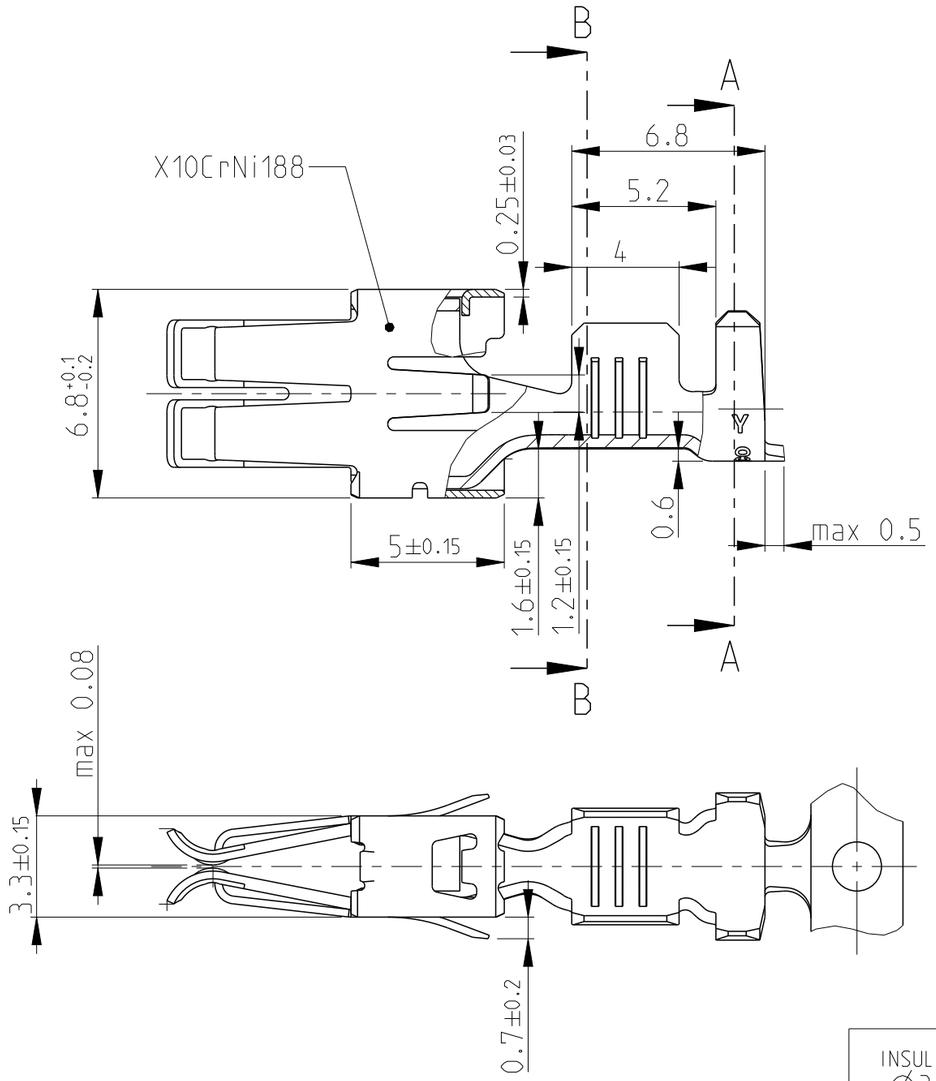

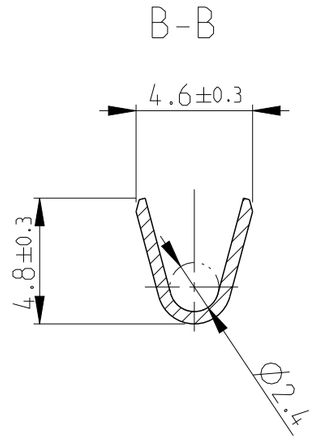

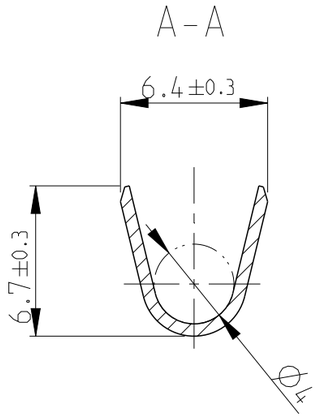

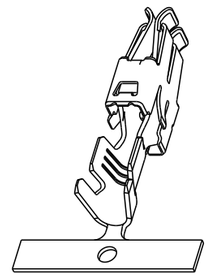

2:1

INSUL. RANGE	WIRE RANGE
Ø3.3-4.5 mm	>2.5-4.0 mm²

-	PRETINNED	CuFe2	3-964328-1	A
LP NO	FINISH	MATERIAL	PART NO.	REV

THIS DRAWING IS A CONTROLLED DOCUMENT.

DIMENSIONS: mm

TOLERANCES UNLESS OTHERWISE SPECIFIED:
0 PLC ±-
1 PLC ±-
2 PLC ±-
3 PLC ±-
4 PLC ±-
ANGLES ±1°
±0.2

MATERIAL -

FINISH -

DWN ATZMANN 06.01.94
CHK BARTOSCH 18.01.94
APVD Bleicher,M. 28.11.07
PRODUCT SPEC 108-18025
APPLICATION SPEC 114-18037
WEIGHT ~~0.82 g~~

TE Connectivity

NAME STANDARD POWER TIMER KONTAKT
(Gerade Tulpe)
-

SIZE	CAGE CODE	DRAWING NO	RESTRICTED TO
A3	00779	C-964203	-

Customer Drawing

SCALE	SHEET	REV
5:1	8 OF 9	C8

THIS DRAWING IS UNPUBLISHED. RELEASED FOR PUBLICATION -
© COPYRIGHT - - ALL RIGHTS RESERVED.

LOC	DIST

REVISIONS

P	LTR	DESCRIPTION	DATE	DWN	APVD
	-	SEE SHEET 1	-	-	-

ONLY FOR 3-968037-2

OTHER DIMENSIONS SEE SHEET 1

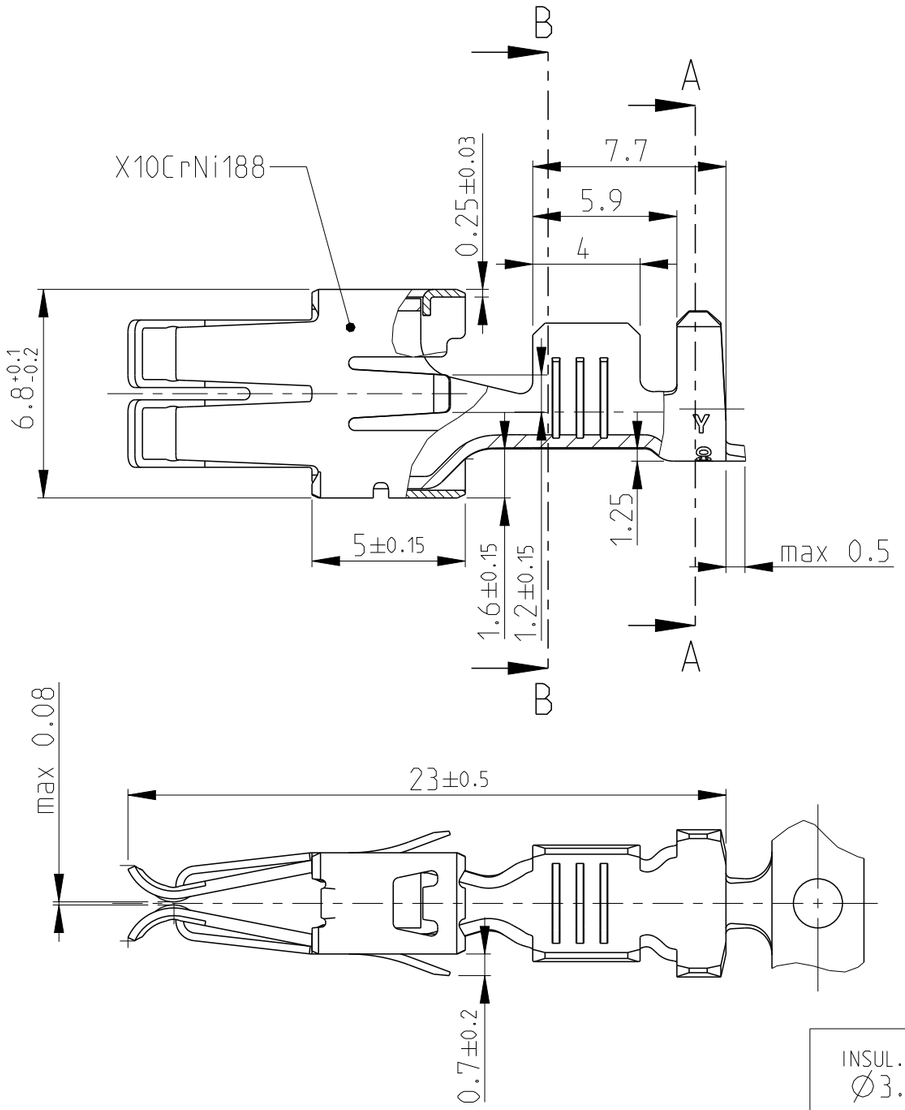

B-B

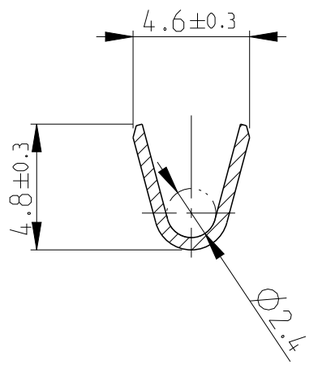

A-A

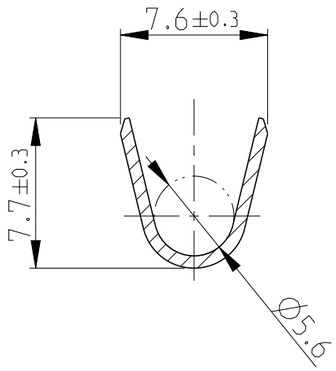

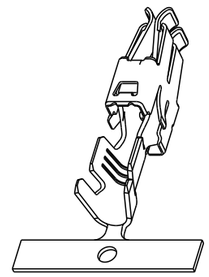

2:1

INSUL. RANGE	WIRE RANGE
Ø3.4-3.7 mm	>2.5-4.0 mm²

-	PRETINNED	CuSn4	3-968037-2	A
LP NO	FINISH	MATERIAL	PART NO.	REV

THIS DRAWING IS A CONTROLLED DOCUMENT.

DIMENSIONS: mm

TOLERANCES UNLESS OTHERWISE SPECIFIED:
0 PLC ±-
1 PLC ±-
2 PLC ±-
3 PLC ±-
4 PLC ±-
ANGLES ±1°
±0.2

MATERIAL -

FINISH -

DWN ATZMANN 06.01.94
CHK BARTOSCH 18.01.94
APVD Bleicher.M. 28.11.07
PRODUCT SPEC 108-18025
APPLICATION SPEC 114-18037
WEIGHT ~~0.82 g~~

TE Connectivity

NAME STANDARD POWER TIMER KONTAKT
(Gerade Tulpe)
-

SIZE	CAGE CODE	DRAWING NO	RESTRICTED TO
A3	00779	C-964203	-

Customer Drawing

SCALE	SHEET	REV
5:1	9 OF 9	C8

Mouser Electronics

Authorized Distributor

Click to View Pricing, Inventory, Delivery & Lifecycle Information:

TE Connectivity:

964203-2