THIS DRAWING IS UNPUBLISHED. RELEASED FOR PUBLICATION 1997
© COPYRIGHT 1997 BY - ALL RIGHTS RESERVED.

| REVISIONS | | | | | |
|---|---|---|---|---|---|
| P | LTR | DESCRIPTION | DATE | DWN | APVD |
| | A10 | ECR-16-015318 | 19SEP2017 | GR | MKO |

PN 1-3 & 2-3

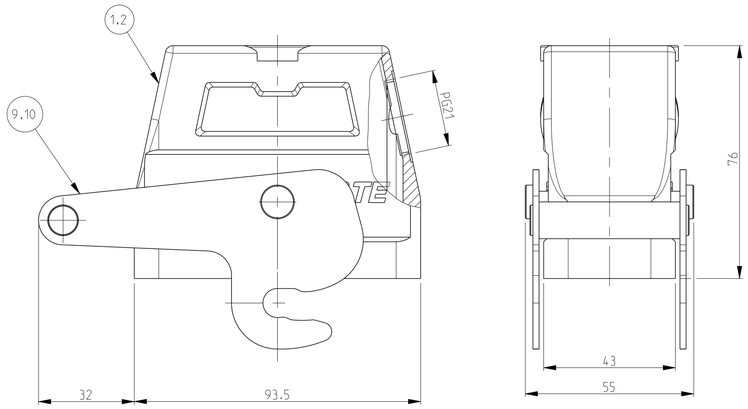


PN 0-4. 0-1. 2-6 & 1-6

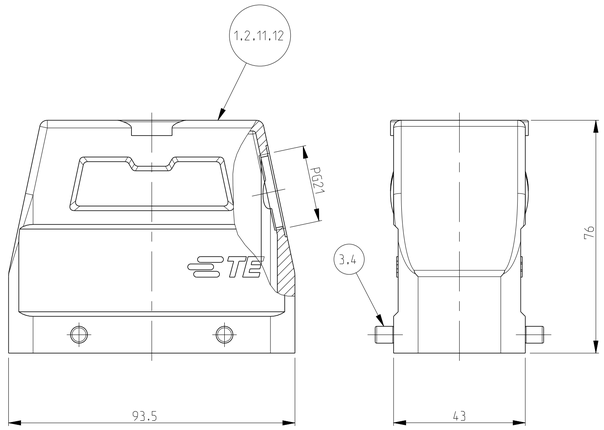


NOTES

1 Material: Housing: aluminium diecasting alloy

2 Surface:- powder varnish-grey
Varnish black

3 Varnish on the inside not necessarily

4 Packaging
quantity 5 piece

PN 1-7 & 0-5

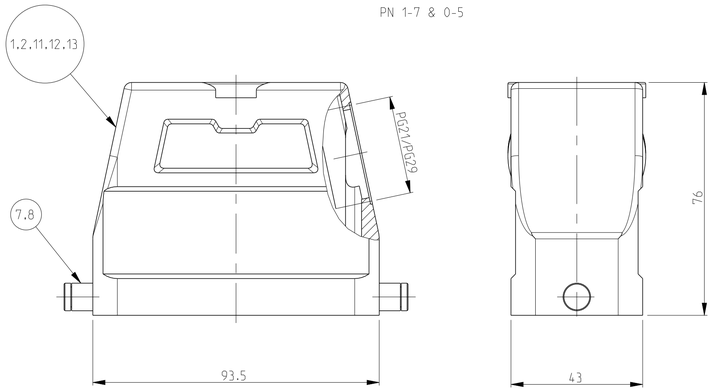


PN 0-3 & 0-6

5 Valid only for PN 0-3 & 0-6
Landing at measure 72.5 (20mm Deep) milled off : bothsides

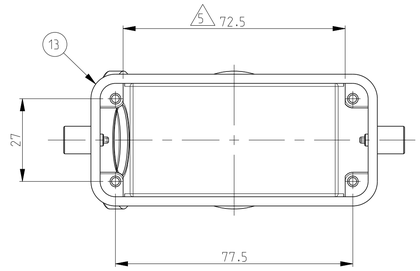


PN 1-1 & 2-1

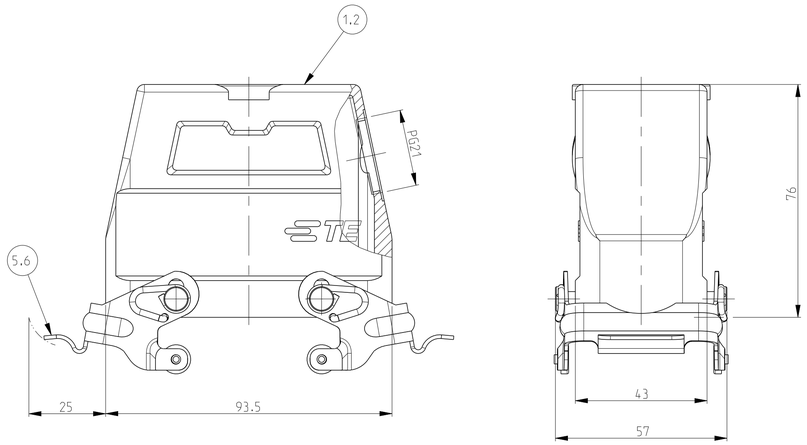


| PN 1-1 & 2-1 | PN 1-3 & 2-3 | PN 0-4.0-1.2-6 & 1-6 |
|---|---|---|
| | 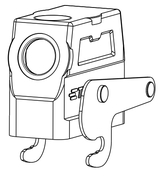 | |
| SCALE 1:2 | SCALE 1:2 | SCALE 1:2 |

| 0-6 | 0-5 | 0-4 | 0-3 | 0-2 | 0-1 | 2-3 | 1-3 | 2-7 | 1-7 | 2-1 | 1-1 | 2-6 | 1-6 | DESCRIPTION | MATERIAL | SURFACE | COLOR | ITEM NO | NOTES |
|---|---|---|---|---|---|---|---|---|---|---|---|---|---|---|---|---|---|---|---|
| | | | | | | | | | | | | | | HD-K Hood | Aluminium | Aluminium oxide | Black | 13 | Landing machined 5 |
| | | | | | | | | | | | | | | HD Hood | Aluminium | - | Grey | 12 | With out PG/with out TE-logo |
| | | | | | | | | | | | | | | HD Hood | Aluminium | - | Grey | 11 | With out PG |
| | | | | | | | | | | | | | | ZB-Central clip | Stainless Steel | - | - | 10 | - |
| | | | | | | | | | | | | | | ZB-Central clip | Steel | Zinc plated | Blue | 9 | - |
| | | | | | | | | | | | | | | LB-Clip bolt | Stainless Steel | - | - | 8 | - |
| | | | | | | | | | | | | | | LB-Clip bolt | Steel | Zinc plated | Blue | 7 | - |
| | | | | | | | | | | | | | | VS-Locking clip | Stainless Steel | - | | 6 | - |
| | | | | | | | | | | | | | | VS-Locking clip | Steel | Zinc plated | Blue | 5 | - |
| | | | | | | | | | | | | | | VS-Clip bolt | Stainless Steel | - | | 4 | - |
| | | | | | | | | | | | | | | VS-Clip bolt | Steel | Zinc plated | Blue | 3 | - |
| | | | | | | | | | | | | | | HD-K Hood | Aluminium | Aluminium oxide | Black | 2 | - |
| | | | | | | | | | | | | | | HD Hood | Aluminium | - | Grey | 1 | - |
| 1 | | | 1 | | | | | | | | | | | HD-K Hood | Aluminium | Aluminium oxide | Black | 13 | Landing machined 5 |
| | 1 | 1 | | | | | | | | | | | | HD Hood | Aluminium | - | Grey | 12 | With out PG/with out TE-logo |
| | | | | 1 | 1 | | | | | | | | | HD Hood | Aluminium | - | Grey | 11 | With out PG |
| | | | | | | 1 | | | | | | | | ZB-Central clip | Stainless Steel | - | - | 10 | - |
| | | | | | | | 1 | | | | | | | ZB-Central clip | Steel | Zinc plated | Blue | 9 | - |
| 2 | | | 2 | | | | | 2 | | | | | | LB-Clip bolt | Stainless Steel | - | - | 8 | - |
| | 2 | | | 2 | | | | | 2 | | | | | LB-Clip bolt | Steel | Zinc plated | Blue | 7 | - |
| | | | | | | | | | | 2 | | | | VS-Locking clip | Stainless Steel | - | | 6 | - |
| | | | | | | | | | | | 2 | | | VS-Locking clip | Steel | Zinc plated | Blue | 5 | - |
| | | | | | | | | | | | | 4 | | VS-Clip bolt | Stainless Steel | - | | 4 | - |
| | | 4 | | | 4 | | | | | | | | 4 | VS-Clip bolt | Steel | Zinc plated | Blue | 3 | - |
| | | | | | | 1 | | 1 | | 1 | | 1 | | HD-K Hood | Aluminium | Aluminium oxide | Black | 2 | - |
| | | | | | | | 1 | | 1 | | 1 | | 1 | HD Hood | Aluminium | - | Grey | 1 | - |
| 5 | | | 5 | | | | | | | | | | | ORDERING TEXT | | | | | |
| | | | | | | | | | | | | | | HD.40.STS.1.21.G | | | | | |
| | | | | | | | | | | | | | | HD-K.40.STS.1.21.G | | | | | |
| | | | | | | | | | | | | | | ~~HD.40.STS-VS.1.21.G~~ | | | | | |
| | | | | | | | | | | | | | | ~~HD-K.40.STS-VS.1.21.G~~ | | | | | |
| | | | | | | | | | | | | | | ~~HD.40.STS-GR.1.21.G~~ | | | | | |
| | | | | | | | | | | | | | | ~~HD-K.40.STS-GR.1.21.G~~ | | | | | |
| | | | | | | | | | | | | | | ~~HD-Z.40.STS-ZB.1.21.G~~ | | | | | |
| | | | | | | | | | | | | | | ~~HD-K/Z.40.STS-ZB.1.21.G~~ | | | | | |
| | | | | | | | | | | | | | | ~~HD.40.ST~~ | | | | | |
| | | | | | | | | | | | | | | ~~HD.40.ST-GR~~ | | | | | |
| | | | | | | | | | | | | | | ~~HD-K.40.STS-GR.1.21.G~~ | | | | | |
| | | | | | | | | | | | | | | ~~HD.40.ST~~ | | | | | |
| | | | | | | | | | | | | | | ~~HD.40.ST-GR~~ | | | | | |
| | | | | | | | | | | | | | | ~~HD-K.40.STS-GR.1.21.G~~ | | | | | |

OBSOLETE OBSOLETE OBSOLETE OBSOLETE

THIS DRAWING IS A CONTROLLED DOCUMENT.

DIMENSIONS: mm

TOLERANCES UNLESS OTHERWISE SPECIFIED: A.DIM ±0.05 A.DIM ±0.05 0 PLC ± 1 PLC ± 2 PLC ± 3 PLC ± 4 PLC ± ANGLES ±

MATERIAL

FINISH

DWN Schneider 19.12.1997
CHK Kramer 26.06.1998
APVD -
PRODUCT SPEC -
APPLICATION SPEC -
WEIGHT

TE Connectivity

NAME HOOD
HD.40.STS.1.21.G/1.29.G

| SIZE | CAGE CODE | DRAWING NO | RESTRICTED TO |
|---|---|---|---|
| A1 | 00779 | C-1102564 | - |

CUSTOMER DRAWING SCALE 1:1 SHEET 1 OF 1 REV A10

# Mouser Electronics

Authorized Distributor

Click to View Pricing, Inventory, Delivery & Lifecycle Information:

TE Connectivity:

1-1102564-6