MALLORY Mallory Sonalert Products Inc.	Part # AST501
Sales Outline Drawing	Revision B

OBSOLETE- USE AST501Q

Specificati

Resonant Frequency (Hz)	2400
Operating Voltage (Vp-p)	1.0 ~ 2.0
Rated Voltage (Vp-p)	1.5
Current Consumption Max. (mA)	50 at Rated Voltage
Sound Pressure Level Min. (dB)	85 at 10cm at Rated Voltage
Coil Resistance (Ω)	15 ± 3
Operating Temperature (°C)	-20 ~ +70
Storage Temperature (°C)	-30 ~ +80
Housing	PPO plastic resin (Color: Gray)
Type of Connection Terminals	SMD
Weight (Grams)	2.6
Options	For other options contact factory

PS: Vp-p = 1/2duty, square wave

Dimensions: (units: mm)

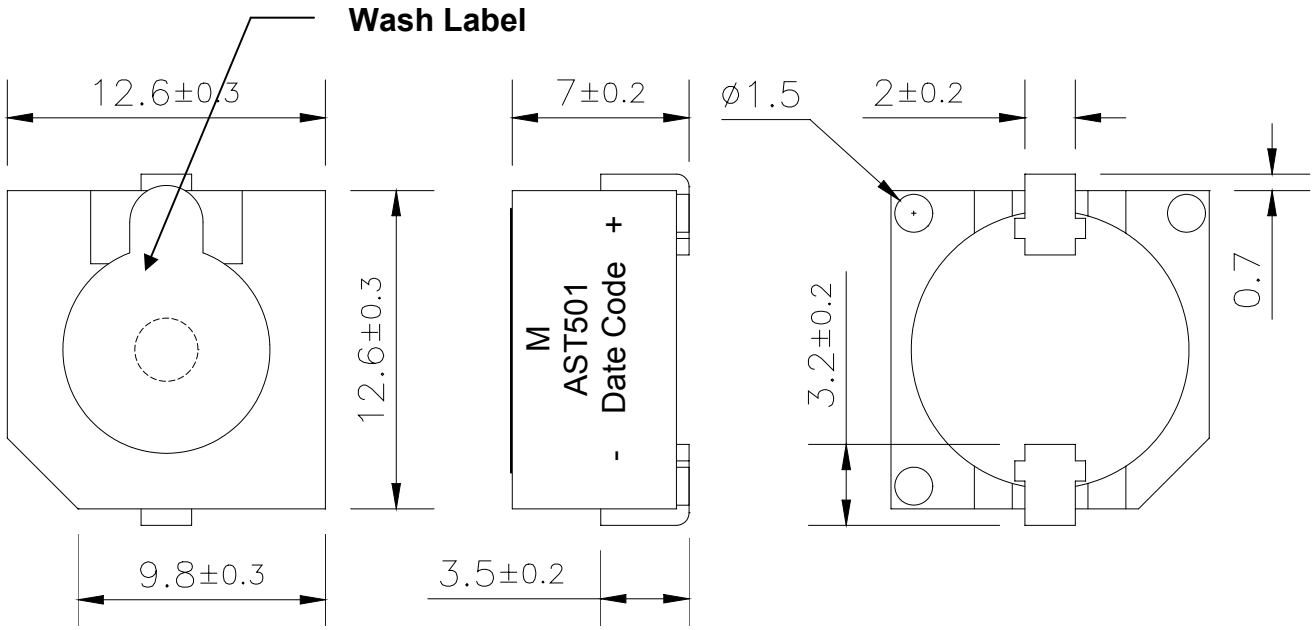

Mouser Electronics

Authorized Distributor

Click to View Pricing, Inventory, Delivery & Lifecycle Information:

Mallory Sonalert:

AST501