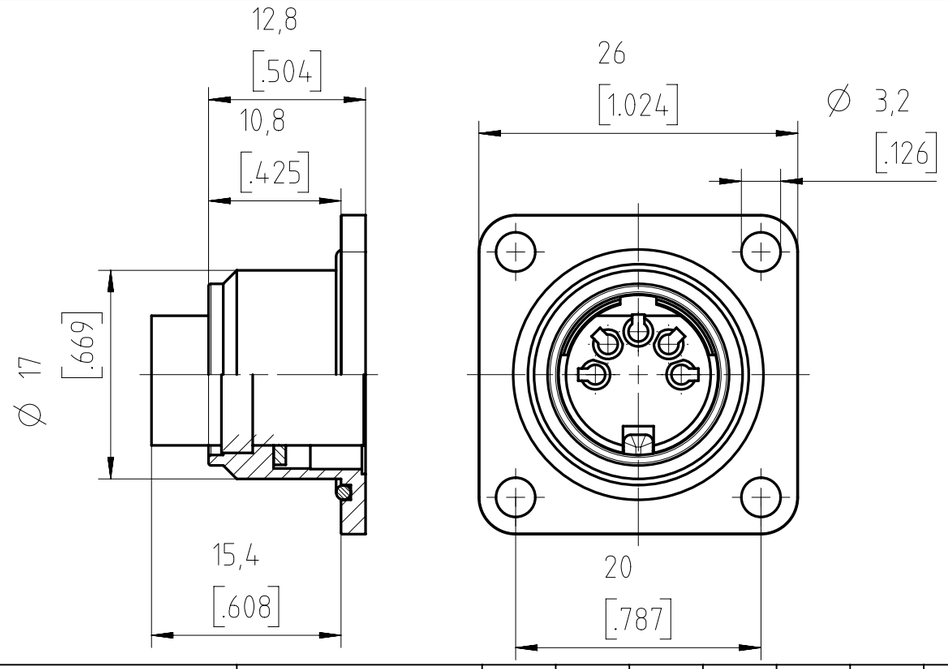

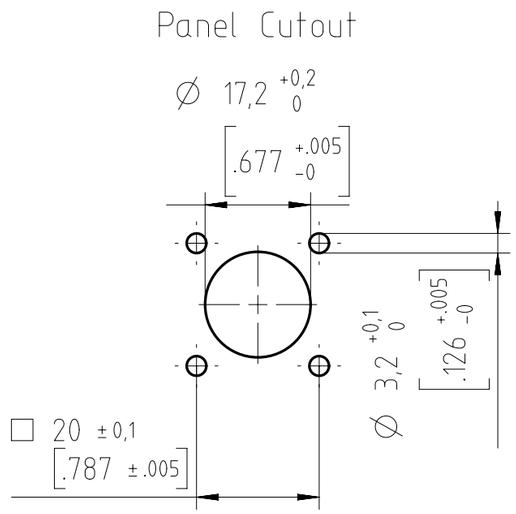

Sealing area must be flat and polished.
Provide suitable sealing for the screws.

Number of contacts	Standard	3	4	5	5S	6	7	7	8	12	14
Contact arrangement	DIN EN 61076-2-106	03-a	04-a	05-a	05-b	06-a	07-a	07-b	08-a	12-a	14-a
Contact arrangement	IEC 60130-9[1]			-			-			-	
Rated voltage[2]	IEC 60664-1	300 V (100 V)		300 V (63 V)	100 V (32 V)	300 V (63 V)		100 V (32 V)		150 V (32 V)	
Rated voltage	UL 1977	250 V								60 V	
Rated impulse withstand voltage[2]	IEC 60664-1	1500 V (840 V)			1200 V (500 V)	1500 V (840 V)		1200 V (500 V)			
Pollution degree[2]	IEC 60664-1	1 (3[3])									
Installation category	IEC 60664-1	I									
Insulation group	IEC 60664-1	II, 400 ≤ CTI < 600									
Current rating	IEC 60512-5-2 UL 1977	5A/+40°C/+104°F								3A/+40°C/+104°F	
Insulation resistance	IEC 60512-3-1	>10^{10} Ohm[4]									
Contact resistance	IEC 60512-2-1	<5m Ohm									
Climatic category	IEC 60668-1	40 / 100 / 56									
Temperatur range	IEC 60668-1	-40°C...+100°C / -40°F...+212°F									
salt spray resistance	DIN IEC 60068-2-11	720h									
IP degree	IEC 60529	IP 67 / IP 65 (in mated condition)									
Insertion and withdrawal force	IEC 60512-13-2	25N	30N	35N		50N	55N		60N	50N	
Mechanical operation	IEC 60512-9-1	silver ≥500 mating cycles gold ≥1000 mating cycles									
Housing material		brass and / or zinc die cast, nickel plated									
Dielectric material		thermoplastic									
Contacts		silver or gold plated, please order contacts separately acc. to drawing M-N 02 015 00XX X (3-8pol) or M-N 02 010 0157 X U (12-14pol)									
Termination technique		crimp									
Wire gauge		2-6 pol (exclusive 5S): 0,09-1,0mm² / 28-18 AWG 5S, 7, 7S, 8pol: 0,09-0,75mm² / 28-20 AWG								0,09-0,25mm² / 28-24 AWG	
Flamability		UL 94 V0									
locking system	IEC 60130-9 DIN EN 61076-2-106	metal screw coupling; tightening torque 0,7Nm									

[1] Edition 2000-05
[2] values in brackets are according to DIN EN 61076-2-106
[3] designed acc. pollution degree 2, can be used under pollution degree 3 when the rules of IEC 60644-1 are fulfilled
[4] under operating conditions >10^8 Ohm

All technical data have been measured in a laboratory environment and can be different during pratical usage of the product. Any product informtion is for descriptive usage only and not legally binding; particulary the information does not constitute or provide any legal guaranties. Do not connect or disconnect under load. Metal housing parts shall be securely incoporated to protected ground.
Parts according to directive 2002/95/EG (RoHS).

Contact arrangement View on mating side	Number of contacts (Contact arrangement acc. IEC 61076-2-106)	Part number
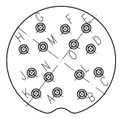	14 (14-a)	C091 11T014 000 2 U
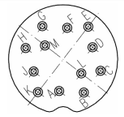	12 (12-a)	C091 11T012 000 2 U
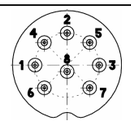	8 (08-a)	C091 11T008 000 2 U
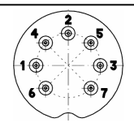	7 (07-b)	C091 11T107 000 2 U
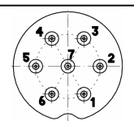	7 (07-a)	C091 11T007 000 2 U
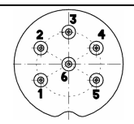	6 (06-a)	C091 11T006 000 2 U
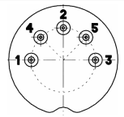	5 (05-b)	C091 11T105 000 2 U
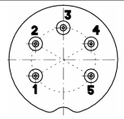	5 (05-a)	C091 11T005 000 2 U
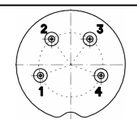	4 (04-a)	C091 11T004 000 2 U
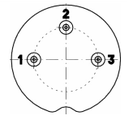	3 (03-a)	C091 11T003 000 2 U

Gewicht (errechnet) / *Calc WT* : g	Zul. Abw. / *Tolerances* :		Maßstab / *Scale* : 2:1 A3
Prüfmaß / *Testdimension*		DIN / ISO 13715	CUSTOMER DRAWING
Teileindex *Partindexnumber*			
	2014	Datum / *Date*	Name
	Gez. *Drawn*	25.06.	Mohrlang
	Gepr. *Checked*		
	Amphenol-Tuchel Electronics GmbH		Gerätedose female receptacle
			M C091 11TXXX 000 2 U — Blatt / *Sheet* 1 / 1 Bl.
02 201400467 25.06.14 IM			Ers. f. / *Replacement for* : M-C091 11TXXX 000 2 U Rev01
Index Änderung / *Description* Datum / *Date* Name			

Copying of this document and giving it to others and the use or communication of the contents thereof, are forbidden without express authority. Offenders are liable to the payment of damages. All rights are reserved in the event of the grant of a patent or the registration of the utility model or design.

Weitergabe sowie Vervielfältigung dieser Unterlage, Verwertung und Mitteilung ihres Inhalts nicht gestattet, soweit nicht ausdrücklich zugestanden. Zuwiderhandlungen verpflichten zu Schadenersatz. Alle Rechte für den Fall der Patenterteilung oder Gebrauchsmuster-Eintragung vorbehalten.

Mouser Electronics

Authorized Distributor

Click to View Pricing, Inventory, Delivery & Lifecycle Information:

Amphenol:
C091-11T107-000-2