P/N	LENGTH
79516-1021	1000 +/-50MM
79516-1023	3000 +/-100MM
79516-1025	5000 +/-150MM

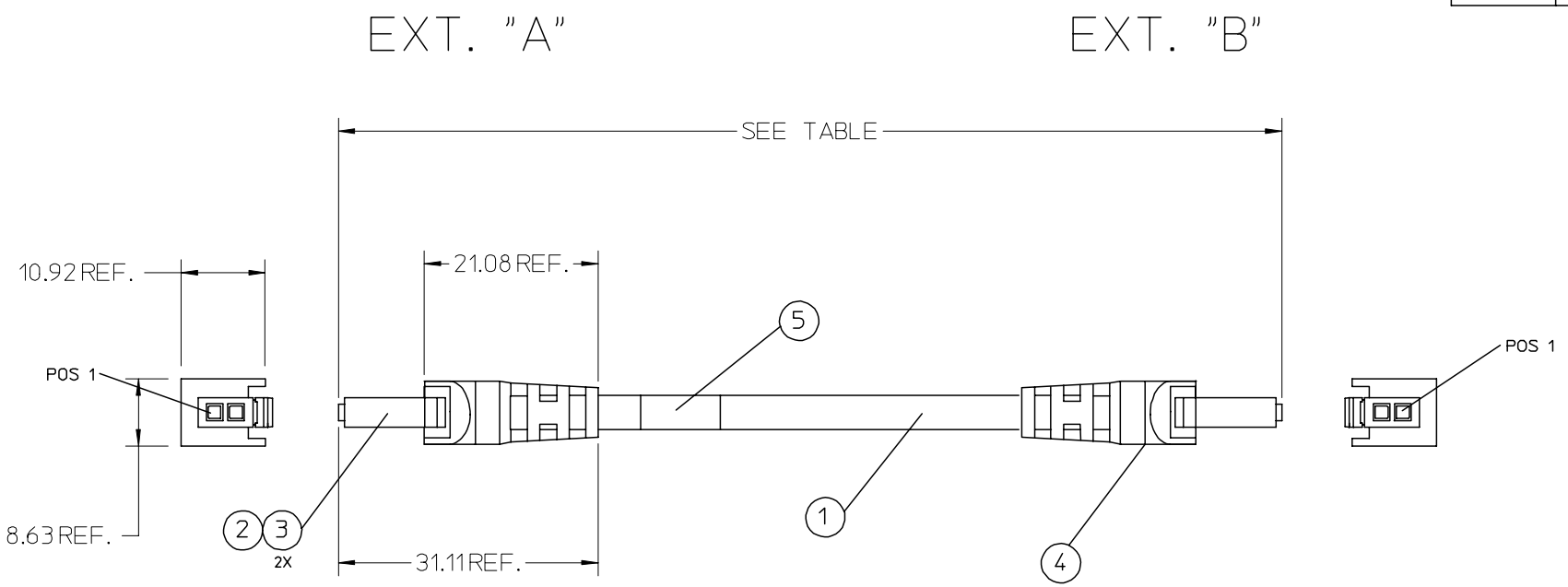

NOTES:
1. PIN CONNECTION ACCORDING TO TABLE.
2. LABEL CABLE WITH FOLLOWING INFORMATION:
   P/N (SEE TABLE)
   REV. (SEE REVISION TABLE)
   M/D WW/YY
   ASSEMBLED IN MEXICO

WIRING CHART

EXT. "A" POS.	COLOR	EXT. "B" POS.
1	BLACK	1
2	WHITE	2

ITEM	P/N	DESCRIPTION	QTY
5	0799212000	PLASTIC LABEL O-TW10F	1 PC
4	0899920428	PVC 15% MF BLACK UL94V-2	A/R
3	0430300004	MicroFit 3.0 F Crp Term Chn Tin 26-30	4 PC
2	0430250200	MicroFit 3.0 DR Rcpt PnlMnt 2Ckt	2 PC
1	0799232214	CABLE 2 COND, 26AWG, JACKETED	A/R

RELEASED
EC NO: MEX2006-0156 2006/03/31
DRWN:AOROZCO 2006/03/31
CH'KD:ACUEVAS 2006/04/03
APPR:ACUEVAS
DESCRIPTION
A
REV

QUALITY SYMBOLS
▼=0
▽=0

GENERAL TOLERANCES (UNLESS SPECIFIED)

	mm	INCH
4 PLACES	± ---	± ---
3 PLACES	± ---	± ---
2 PLACES	± ---	± ---
1 PLACE	± ---	± ---
ANGULAR ±---°		

DRAFT WHERE APPLICABLE MUST REMAIN WITHIN DIMENSIONS

DIMENSION STYLE: MM ONLY
SCALE: ---
DESIGN UNITS: METRIC
THIRD ANGLE PROJECTION

DRAWN BY: AOROZCO DATE: 10/10/2003
CHECKED BY: AOROZCO DATE: 10/10/2003
APPROVED BY: ACUEVAS DATE: 10/10/2003

TITLE: MICRO-FIT OVERMOLDED ASSEMBLY 2 CKT 1, 3 & 5 MTS.

molex MOLEX INCORPORATED

MATERIAL NO.: VARIOS
DOCUMENT NO.: SD-79516-001
SHEET NO.: 1 OF 1
SIZE: A

THIS DRAWING CONTAINS INFORMATION THAT IS PROPRIETARY TO MOLEX INCORPORATED AND SHOULD NOT BE USED WITHOUT WRITTEN PERMISSION