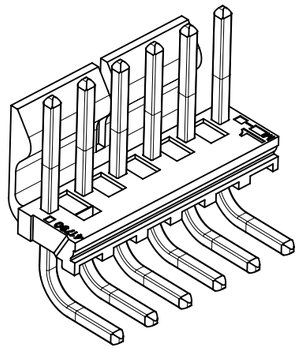

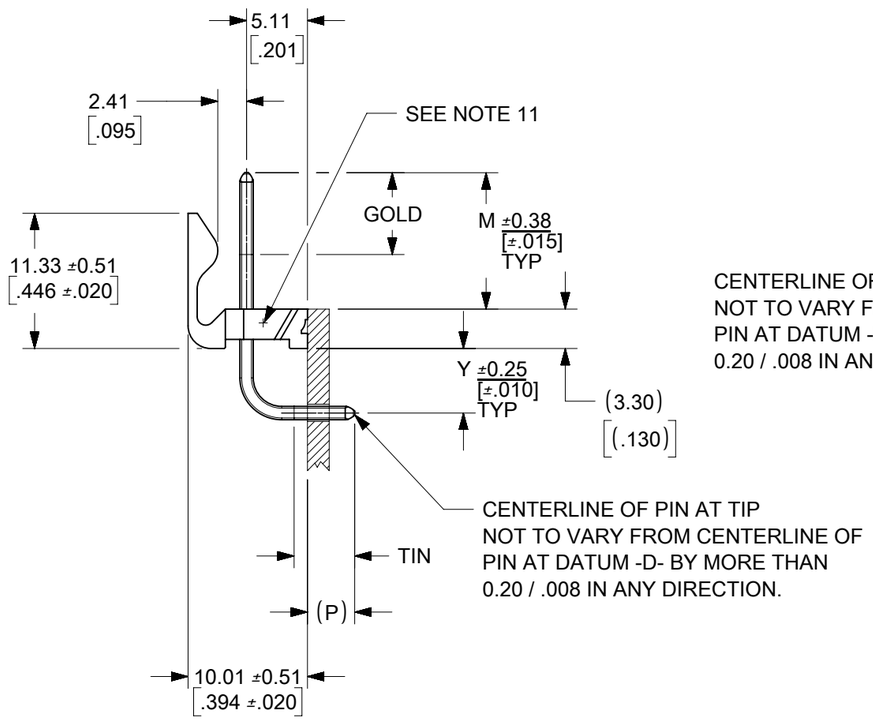

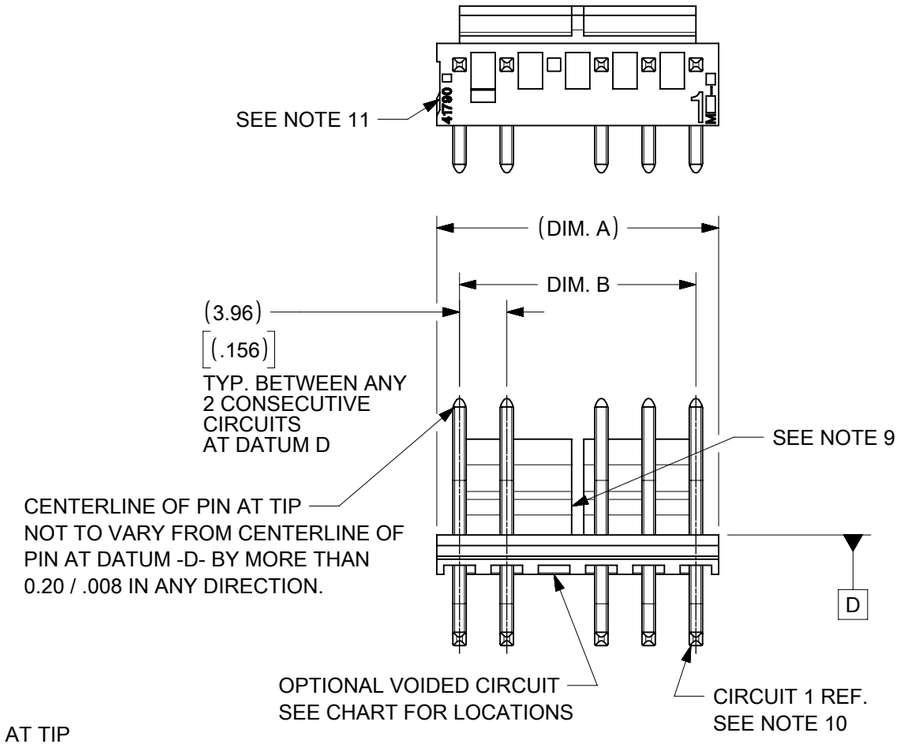

CKT	DIM. A	DIM. B	SLOT LOC BETWEEN CKTS
2	7.77 .306	3.96±0.05 .156±.002	NONE
3	11.73 .462	7.92±0.08 .312±.003	NONE
4	15.70 .618	11.89±0.08 .468±.003	NONE
5	19.66 .774	15.85±0.10 .624±.004	NONE
6	23.62 .930	19.81±0.10 .780±.004	3 & 4
7	27.58 1.086	23.77±0.10 .936±.004	4 & 5
8	31.55 1.242	27.74±0.13 1.092±.005	4 & 5
9	35.51 1.398	31.70±0.13 1.248±.005	5 & 6
10	39.47 1.554	35.66±0.13 1.404±.005	5 & 6
11	43.43 1.710	39.62±0.15 1.560±.006	6 & 7
12	47.40 1.866	43.59±0.15 1.716±.006	4 & 5 8 & 9
13	51.36 2.022	47.55±0.15 1.872±.006	4 & 5 9 & 10
14	55.32 2.178	51.51±0.18 2.028±.007	5 & 6 9 & 10
15	59.28 2.334	55.47±0.18 2.184±.007	5 & 6 10 & 11
16	63.25 2.490	59.44±0.18 2.340±.007	5 & 6 11 & 12
17	67.21 2.646	63.40±0.20 2.496±.008	6 & 7 11 & 12
18	71.17 2.802	67.36±0.20 2.652±.008	6 & 7 12 & 13

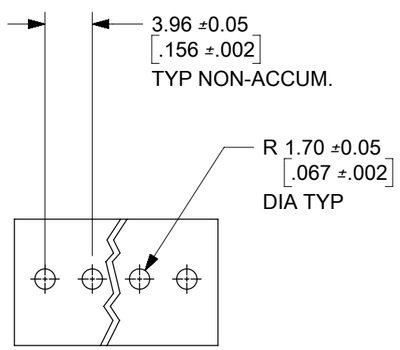

PCB LAYOUT: COMPONENT SIDE

NOTES:
1. MATERIAL: HEADER-GLASS FILLED POLYESTER, 94V-0, MOLDED NATURAL (WHITE).
2. FINISH: (197) OVERALL REFLOWED MATTE TIN: 0.00152/.000060 MIN.
   OVER 0.00127/.000050 MIN. NICKEL OVERALL.
   (154) OVERALL TIN: .00254/.000100 MIN OVER .00127/.000050 MIN NICKEL.
   (208) SELECT GOLD: .00038/.000015 MIN, SELECT TIN: .00254/.000100 MIN,
   OVERALL NICKEL UNDERPLATE: .00127/.000050 MIN.
   (228) SELECT GOLD: .00076/.000030 MIN, SELECT TIN: .00254/.000100 MIN,
   OVERALL NICKEL UNDERPLATE: .00127/.000050 MIN.
   (241) SELECT GOLD: 0.00051/.000020 MIN.
   SELECT TIN: 0.00254/.000100 MIN.
   OVERALL NICKEL UNDERPLATE: 0.00127/.000050 MIN.
   FOR ADDITIONAL PLATING INFO, SEE SDES-88.
3. PRODUCT SPECIFICATION AND PROCESS PARAMETERS: SEE PS-08-50.
4. PACKAGING INFORMATION: SEE CHART
5. SOLDERABILITY: PER SMES-152.
6. PIN PUSH-OUT FORCE: PRIOR TO SOLDERING, A 3 LB. MINIMUM FORCE (IN EITHER DIRECTION)
7. PARTS ARE STACKABLE END TO END ON 3.96/.156 CENTERS.
8. THIS PART CONFORMS TO CLASS B REQUIREMENTS OF COSMETIC SPECIFICATION PS-45499-002.
9. SLOTS ON BACKWALL ARE BETWEEN CIRCUITS. SEE CHART FOR LOCATION.
10. CIRCUIT 1 DESIGNATION IS USED TO DEFINE VOID LOCATION. CIRCUIT 1 MAY OR MAY NOT LINE UP WITH CIRCUIT 1 ON THE MATING HOUSING.
11. FEATURE MAY BE ON EITHER SIDE OF THE PART

SYMBOLS: E = 0, E = 0, P = 0, S = 0, ▼ = 0, C = 0, ☒ = 0, ■ = 0, V = 0

THIS DRAWING CONTAINS INFORMATION THAT IS PROPRIETARY TO MOLEX ELECTRONIC TECHNOLOGIES, LLC AND SHOULD NOT BE USED WITHOUT WRITTEN PERMISSION

DIMENSION UNITS: mm/in
SCALE

GENERAL TOLERANCES (UNLESS SPECIFIED)

	MM	INCH
4 PLACES	±	±
3 PLACES	±	± 0.01
2 PLACES	± 0.25	± 0.015
1 PLACE	± 0.38	±
0 PLACES	±	±
ANGULAR TOL	± 0.5 °	

DRAFT WHERE APPLICABLE MUST REMAIN WITHIN DIMENSIONS

CURRENT REV DESC: NOTE 11 ADDED

EC NO: 620875
DRWN: KSUTAR 2019/07/18
CHK'D: ISHWARG 2019/07/18
APPR: ISHWARG 2019/07/18

INITIAL REVISION:
DRWN: JSCHAFER 11-07-03
APPR: MARGULIS 11-17-03

THIRD ANGLE PROJECTION | DRAWING: B-SIZE | SERIES: 41792

molex

KK .156 HEADER ASSEMBLY
FRICTION LOCK RIGHT ANGLE W/O PEGS

PRODUCT CUSTOMER DRAWING

DOCUMENT NUMBER	DOC TYPE	DOC PART	REVISION
SDA-41792	PSD	000	K7

MATERIAL NUMBER	CUSTOMER	SHEET NUMBER
SEE CHART	GENERAL MARKET	1 OF 8

Model: EM-41792 (SD Package)

DOCUMENT STATUS	P1	RELEASE DATE	2019/07/18 08:33:56

FORMAT: Eng-tega-master-tb-prod-B
REVISION: D
DATE: 2018/01/18

41792

OPTIONS								
	Group	A-41792-0002/0018	Group	A-41792-0511/0527	Group	A-41792-0528/0544	Group	A-41792-0562/0578
	Header No:	41790-0002/0018	Header No:	41790-0002/0018	Header No:	41790-0002/0018	Header No:	41790-0002/0018
	Pin No:	43294-0572	Pin No:	43294-0569	Pin No:	43294-0570	Pin No:	43294-0570
	Plating:	197 – TIN	Plating:	208 – 15 GOLD	Plating:	228 – 30 GOLD	Plating:	228 – 30 GOLD
	Pin Length L	27.94 / 1.100	Pin Length L	27.94 / 1.100	Pin Length L	27.94 / 1.100	Pin Length L	27.94 / 1.100
	Mating M	11.43 / .450	Mating M	11.43 / .450	Mating M	11.43 / .450	Mating M	11.43 / .450
	Gold Loc G	N/A	Gold Loc G	6.86/ .270	Gold Loc G	6.86/ .270	Gold Loc G	6.86/ .270
	Height Y	5.41 / .213	Height Y	5.41 / .213	Height Y	5.41 / .213	Height Y	5.41 / .213
	PC Tail P	3.96/ .156	PC Tail P	3.96/ .156	PC Tail P	3.96/ .156	PC Tail P	3.96/ .156
	Tin Loc T	OVERALL	Tin Loc T	5.08/ .200	Tin Loc T	5.08/ .200	Tin Loc T	5.08/ .200
	Voided Ckts	NONE	Voided Ckts	NONE	Voided Ckts	NONE	Voided Ckts	2
	Pack Per	PK-41792-002	Pack Per	PK-41792-002	Pack Per	PK-41792-002	Pack Per	PK-41792-002
Ckts	Material No	Engineer Number	Material No	Engineer Number	Material No	Engineer Number	Material No	Engineer Number
2	26-60-5020	A-41792-0002	41792-0511	A-41792-0511	41792-0528	A-41792-0528	41792-0562	A-41792-0562
3	26-60-5030	A-41792-0003	41792-0512	A-41792-0512	41792-0529	A-41792-0529	41792-0563	A-41792-0563
4	26-60-5040	A-41792-0004	41792-0513	A-41792-0513	41792-0530	A-41792-0530	41792-0564	A-41792-0564
5	26-60-5050	A-41792-0005	41792-0514	A-41792-0514	41792-0531	A-41792-0531	41792-0565	A-41792-0565
6	26-60-5060	A-41792-0006	41792-0515	A-41792-0515	41792-0532	A-41792-0532	41792-0566	A-41792-0566
7	26-60-5070	A-41792-0007	41792-0516	A-41792-0516	41792-0533	A-41792-0533	41792-0567	A-41792-0567
8	26-60-5080	A-41792-0008	41792-0517	A-41792-0517	41792-0534	A-41792-0534	41792-0568	A-41792-0568
9	26-60-5090	A-41792-0009	41792-0518	A-41792-0518	41792-0535	A-41792-0535	41792-0569	A-41792-0569
10	26-60-5100	A-41792-0010	41792-0519	A-41792-0519	41792-0536	A-41792-0536	41792-0570	A-41792-0570
11	26-60-5110	A-41792-0011	41792-0520	A-41792-0520	41792-0537	A-41792-0537	41792-0571	A-41792-0571
12	26-60-5120	A-41792-0012	41792-0521	A-41792-0521	41792-0538	A-41792-0538	41792-0572	A-41792-0572
13	26-60-5130	A-41792-0013	41792-0522	A-41792-0522	41792-0539	A-41792-0539	41792-0573	A-41792-0573
14	26-60-5140	A-41792-0014	41792-0523	A-41792-0523	41792-0540	A-41792-0540	41792-0574	A-41792-0574
15	26-60-5150	A-41792-0015	41792-0524	A-41792-0524	41792-0541	A-41792-0541	41792-0575	A-41792-0575
16	26-60-5160	A-41792-0016	41792-0525	A-41792-0525	41792-0542	A-41792-0542	41792-0576	A-41792-0576
17	26-60-5170	A-41792-0017	41792-0526	A-41792-0526	41792-0543	A-41792-0543	41792-0577	A-41792-0577
18	26-60-5180	A-41792-0018	41792-0527	A-41792-0527	41792-0544	A-41792-0544	41792-0578	A-41792-0578

THIS DRAWING CONTAINS INFORMATION THAT IS PROPRIETARY TO MOLEX ELECTRONIC TECHNOLOGIES, LLC AND SHOULD NOT BE USED WITHOUT WRITTEN PERMISSION

SYMBOLS: E = 0; C = 0; D = 0; S = 0; ▼ = 0; F = 0; ☒ = 0; ■ = 0; ▽ = 0

DIMENSION UNITS: mm/in

SCALE

GENERAL TOLERANCES (UNLESS SPECIFIED)

	MM	INCH
4 PLACES	±	±
3 PLACES	±	± 0.01
2 PLACES	± 0.25	± 0.015
1 PLACE	± 0.38	±
0 PLACES	±	±
ANGULAR TOL	± 0.5 °	

DRAFT WHERE APPLICABLE MUST REMAIN WITHIN DIMENSIONS

CURRENT REV DESC: NOTE 11 ADDED

EC NO: 620875
DRWN: KSUTAR 2019/07/18
CHK'D: ISHWARG 2019/07/18
APPR: ISHWARG 2019/07/18

INITIAL REVISION:
DRWN: JSCHAFER 11-07-03
APPR: MARGULIS 11-17-03

THIRD ANGLE PROJECTION

DRAWING: B-SIZE
SERIES: 41792

molex

KK .156 HEADER ASSEMBLY
FRICTION LOCK RIGHT ANGLE W/O PEGS

PRODUCT CUSTOMER DRAWING

DOCUMENT NUMBER	DOC TYPE	DOC PART	REVISION
SDA-41792	PSD	000	K7

MATERIAL NUMBER	CUSTOMER	SHEET NUMBER
SEE CHART	GENERAL MARKET	2 OF 8

DOCUMENT STATUS	P1	RELEASE DATE	2019/07/18 08:33:56

FORMAT: Eng-lega-mem-prod-B
REVISION: D
DATE: 2018/01/18

41792

OPTIONS								
	Group	A-41792-0019/0035	Group	A-41792-0036/0050	Group	A-41792-0051/0067	Group	
	Header No:	41790-0002/0018	Header No:	41790-0004/0018	Header No:	41790-0002/0018	Header No:	
	Pin No:	43294-0573	Pin No:	43294-0572	Pin No:	43294-0643	Pin No:	
	Plating:	241 – GOLD	Plating:	197 – TIN	Plating:	197 - TIN	Plating:	
	Pin Length L	27.94 / 1.100	Pin Length L	27.94 / 1.100	Pin Length L	29.97 / 1.180	Pin Length L	
	Mating M	11.43 / .450	Mating M	11.43 / .450	Mating M	13.41 / .528	Mating M	
	Gold Loc G	6.86/ .270	Gold Loc G	N/A	Gold Loc G	N/A	Gold Loc G	
	Height Y	5.41 / .213	Height Y	5.41 / .213	Height Y	5.41 / .213	Height Y	
	PC Tail P	3.96/ .156	PC Tail P	3.96/ .156	PC Tail P	4.01 / .158	PC Tail P	
	Tin Loc T	5.08/ .200	Tin Loc T	OVERALL	Tin Loc T	OVERALL	Tin Loc T	
	Voided Ckts	NONE	Voided Ckts	4	Voided Ckts	NONE	Voided Ckts	
	Pack Per	PK-41792-002	Pack Per	PK-41792-002	Pack Per	PK-41792-002	Pack Per	
Ckts	Material No	Engineer Number	Material No	Engineer Number	Material No	Engineer Number	Material No	Engineer Number
2	26-61-5020	A-41792-0019			26-60-5021	A-41792-0051		
3	26-61-5030	A-41792-0020						
4	26-61-5040	A-41792-0021	26-61-5043	A-41792-0036	26-60-5041	A-41792-0053		
5	26-61-5050	A-41792-0022	26-61-5053	A-41792-0037				
6	26-61-5060	A-41792-0023	26-61-5063	A-41792-0038				
7	26-61-5070	A-41792-0024	26-61-5073	A-41792-0039				
8	26-61-5080	A-41792-0025	26-61-5083	A-41792-0040				
9	26-61-5090	A-41792-0026	26-61-5093	A-41792-0041				
10	26-61-5100	A-41792-0027	26-61-5103	A-41792-0042				
11	26-61-5110	A-41792-0028	26-61-5113	A-41792-0043				
12	26-61-5120	A-41792-0029	26-61-5123	A-41792-0044				
13	26-61-5130	A-41792-0030	26-61-5133	A-41792-0045				
14	26-61-5140	A-41792-0031	26-61-5143	A-41792-0046				
15	26-61-5150	A-41792-0032	26-61-5153	A-41792-0047				
16	26-61-5160	A-41792-0033	26-61-5163	A-41792-0048				
17	26-61-5170	A-41792-0034	26-61-5173	A-41792-0049				
18	26-61-5180	A-41792-0035	26-61-5183	A-41792-0050				

SYMBOLS: E = 0, E = 0, E = 0, S = 0, ▼ = 0, C = 0, ☒ = 0, ■ = 0, ▽ = 0

THIS DRAWING CONTAINS INFORMATION THAT IS PROPRIETARY TO MOLEX ELECTRONIC TECHNOLOGIES, LLC AND SHOULD NOT BE USED WITHOUT WRITTEN PERMISSION

DIMENSION UNITS: mm/in
SCALE

GENERAL TOLERANCES (UNLESS SPECIFIED)

	MM	INCH
4 PLACES	±	±
3 PLACES	±	± 0.01
2 PLACES	± 0.25	± 0.015
1 PLACE	± 0.38	±
0 PLACES	±	±
ANGULAR TOL	± 0.5 °	

DRAFT WHERE APPLICABLE MUST REMAIN WITHIN DIMENSIONS

CURRENT REV DESC: NOTE 11 ADDED

EC NO: 620875
DRWN: KSUTAR 2019/07/18
CHK'D: ISHWARG 2019/07/18
APPR: ISHWARG 2019/07/18

INITIAL REVISION:
DRWN: JSCHAFER 11-07-03
APPR: MARGULIS 11-17-03

THIRD ANGLE PROJECTION

molex

KK .156 HEADER ASSEMBLY
FRICTION LOCK RIGHT ANGLE W/O PEGS

PRODUCT CUSTOMER DRAWING

DOCUMENT NUMBER	DOC TYPE	DOC PART	REVISION
SDA-41792	PSD	000	K7

DRAWING	SERIES	MATERIAL NUMBER	CUSTOMER	SHEET NUMBER
B-SIZE	41792	SEE CHART	GENERAL MARKET	3 OF 8

DOCUMENT STATUS	P1	RELEASE DATE	2019/07/18 08:33:56

FORMAT: Eng-lega-mem-prod-B
REVISION: D
DATE: 2018/01/18

41792

OPTIONS								
	Group	A-41792-0198/0213	Group	A-41792-0214/0227	Group	A-41792-0242/0257	Group	A-41792-0341/0352
	Header No:	41790-0002/0018	Header No:	41790-0005/0018	Header No:	41790-0003/0018	Header No:	41790-0007/0018
	Pin No:	43294-0572	Pin No:	43294-0572	Pin No:	43294-0572	Pin No:	43294-0572
	Plating:	197 – TIN	Plating:	197 – TIN	Plating:	197 – TIN	Plating:	197 – TIN
	Pin Length L	27.94/ 1.100	Pin Length L	27.94/ 1.100	Pin Length L	27.94/ 1.100	Pin Length L	27.94/ 1.100
	Mating M	11.43 / .450	Mating M	11.43 / .450	Mating M	11.43 / .450	Mating M	11.43 / .450
	Gold Loc G	N/A	Gold Loc G	N/A	Gold Loc G	N/A	Gold Loc G	N/A
	Height Y	5.41 / .213	Height Y	5.41 / .213	Height Y	5.41 / .213	Height Y	5.41 / .213
	PC Tail P	3.96 / .156	PC Tail P	3.96 / .156	PC Tail P	3.96 / .156	PC Tail P	3.96 / .156
	Tin Loc T	OVERALL	Tin Loc T	OVERALL	Tin Loc T	OVERALL	Tin Loc T	OVERALL
	Voided Ckts	2	Voided Ckts	5	Voided Ckts	3	Voided Ckts	7
	Pack Per	PK-41792-002	Pack Per	PK-41792-002	Pack Per	PK-41792-002	Pack Per	PK-41792-002
Ckts	Material No	Engineer Number	Material No	Engineer Number	Material No	Engineer Number	Material No	Engineer Number
2								
3	26-62-5031	A-41792-0198			26-62-5035	A-41792-0242		
4	26-62-5041	A-41792-0199			26-62-5045	A-41792-0243		
5	26-62-5051	A-41792-0200	41792-0214	A-41792-0214	26-62-5055	A-41792-0244		
6	26-62-5061	A-41792-0201	26-62-5060	A-41792-0215	26-62-5065	A-41792-0245		
7	26-62-5071	A-41792-0202	41792-0216	A-41792-0216	26-62-5075	A-41792-0246	41792-0341	A-41792-0341
8	26-62-5081	A-41792-0203	41792-0217	A-41792-0217	26-62-5085	A-41792-0247	41792-0342	A-41792-0342
9	26-62-5091	A-41792-0204	41792-0218	A-41792-0218	26-62-5095	A-41792-0248	41792-0343	A-41792-0343
10	26-62-5101	A-41792-0205	26-62-5100	A-41792-0219	26-62-5105	A-41792-0249	26-62-5104	A-41792-0344
11	26-62-5111	A-41792-0206	41792-0220	A-41792-0220	26-62-5115	A-41792-0250	26-62-5114	A-41792-0345
12	26-62-5121	A-41792-0207	41792-0221	A-41792-0221	26-62-5125	A-41792-0251	41792-0346	A-41792-0346
13	26-62-5131	A-41792-0208	41792-0222	A-41792-0222	26-62-5135	A-41792-0252	41792-0347	A-41792-0347
14	26-62-5141	A-41792-0209	41792-0223	A-41792-0223	26-62-5145	A-41792-0253	41792-0348	A-41792-0348
15	26-62-5151	A-41792-0210	41792-0224	A-41792-0224	26-62-5155	A-41792-0254	41792-0349	A-41792-0349
16	26-62-5161	A-41792-0211	41792-0225	A-41792-0225	26-62-5165	A-41792-0255	41792-0350	A-41792-0350
17	26-62-5171	A-41792-0212	41792-0226	A-41792-0226	26-62-5175	A-41792-0256	41792-0351	A-41792-0351
18	26-62-5181	A-41792-0213	41792-0227	A-41792-0227	26-62-5185	A-41792-0257	41792-0352	A-41792-0352

THIS DRAWING CONTAINS INFORMATION THAT IS PROPRIETARY TO MOLEX ELECTRONIC TECHNOLOGIES, LLC AND SHOULD NOT BE USED WITHOUT WRITTEN PERMISSION

SYMBOLS: E = 0; C = 0; D = 0; S = 0; ▼ = 0; F = 0; ☒ = 0; ■ = 0; ▽ = 0

DIMENSION UNITS: mm/in

SCALE

GENERAL TOLERANCES (UNLESS SPECIFIED)

	MM	INCH
4 PLACES	±	±
3 PLACES	±	± 0.01
2 PLACES	± 0.25	± 0.015
1 PLACE	± 0.38	±
0 PLACES	±	±
ANGULAR TOL	± 0.5 °	

DRAFT WHERE APPLICABLE MUST REMAIN WITHIN DIMENSIONS

CURRENT REV DESC: NOTE 11 ADDED

EC NO: 620875
DRWN: KSUTAR 2019/07/18
CHK'D: ISHWARG 2019/07/18
APPR: ISHWARG 2019/07/18

INITIAL REVISION:
DRWN: JSCHAFER 11-07-03
APPR: MARGULIS 11-17-03

THIRD ANGLE PROJECTION

DRAWING: B-SIZE
SERIES: 41792

molex

KK .156 HEADER ASSEMBLY
FRICTION LOCK RIGHT ANGLE W/O PEGS

PRODUCT CUSTOMER DRAWING

DOCUMENT NUMBER	DOC TYPE	DOC PART	REVISION
SDA-41792	PSD	000	K7

MATERIAL NUMBER	CUSTOMER	SHEET NUMBER
SEE CHART	GENERAL MARKET	4 OF 8

DOCUMENT STATUS	P1	RELEASE DATE	2019/07/18 08:33:56

FORMAT: Eng-lega-matrix-prod-B
REVISION: D
DATE: 2018/01/18

41792

OPTIONS								
	Group	A-41792-0460/0471	Group	A-41792-0472/0483	Group	A-41792-0484/0493	Group	A-41792-0579/0595
	Header No:	41790-0007/0018	Header No:	41790-0007/0018	Header No:	41790-0009/0018	Header No:	41790-0002/0018
	Pin No:	43294-0572	Pin No:	43294-0572	Pin No:	43294-0572	Pin No:	43294-0571
	Plating:	197 – TIN	Plating:	197 – TIN	Plating:	197 – TIN	Plating:	154 – TIN
	Pin Length L	27.94 / 1.100	Pin Length L	27.94 / 1.100	Pin Length L	27.94 / 1.100	Pin Length L	27.94 / 1.100
	Mating M	11.43 / .450	Mating M	11.43 / .450	Mating M	11.43 / .450	Mating M	11.43 / .450
	Gold Loc G	N/A	Gold Loc G	N/A	Gold Loc G	N/A	Gold Loc G	N/A
	Height Y	5.41 / .213	Height Y	5.41 / .213	Height Y	5.41 / .213	Height Y	5.41 / .213
	PC Tail P	3.96 / .156	PC Tail P	3.96 / .156	PC Tail P	3.96 / .156	PC Tail P	3.96/ .156
	Tin Loc T	OVERALL	Tin Loc T	OVERALL	Tin Loc T	OVERALL	Tin Loc T	OVERALL
	Voided Ckts	2, 7	Voided Ckts	4, 7	Voided Ckts	2, 5, 9	Voided Ckts	NONE
	Pack Per	PK-41792-002	Pack Per	PK-41792-002	Pack Per	PK-41792-002	Pack Per	PK-41792-002
Ckts	Material No	Engineer Number	Material No	Engineer Number	Material No	Engineer Number	Material No	Engineer Number
2							50-29-1904	A-41792-0579
3							50-29-1905	A-41792-0580
4							50-29-1906	A-41792-0581
5							50-29-1907	A-41792-0582
6							50-29-1908	A-41792-0583
7	41792-0460	A-41792-0460		A-41792-0472			50-29-1909	A-41792-0584
8	41792-0461	A-41792-0461	26-60-5087	A-41792-0473			50-29-1910	A-41792-0585
9	26-60-5096	A-41792-0462		A-41792-0474		A-41792-0484	50-29-1911	A-41792-0586
10	41792-0463	A-41792-0463		A-41792-0475		A-41792-0485	50-29-1912	A-41792-0587
11	41792-0464	A-41792-0464		A-41792-0476		A-41792-0486	50-29-1913	A-41792-0588
12	41792-0465	A-41792-0465		A-41792-0477	26-60-5128	A-41792-0487	50-29-1914	A-41792-0589
13	41792-0466	A-41792-0466		A-41792-0478		A-41792-0488	50-29-1915	A-41792-0590
14	41792-0467	A-41792-0467		A-41792-0479		A-41792-0489	50-29-1916	A-41792-0591
15	41792-0468	A-41792-0468		A-41792-0480		A-41792-0490	50-29-1917	A-41792-0592
16	41792-0469	A-41792-0469		A-41792-0481		A-41792-0491	50-29-1918	A-41792-0593
17	41792-0470	A-41792-0470		A-41792-0482		A-41792-0492	50-29-1919	A-41792-0594
18	41792-0471	A-41792-0471		A-41792-0483		A-41792-0493	50-29-1920	A-41792-0595

SYMBOLS

= 0
= 0
= 0
= 0
= 0
= 0
= 0
= 0
= 0
= 0

THIS DRAWING CONTAINS INFORMATION THAT IS PROPRIETARY TO MOLEX ELECTRONIC TECHNOLOGIES, LLC AND SHOULD NOT BE USED WITHOUT WRITTEN PERMISSION

DIMENSION UNITS: mm/in
SCALE

GENERAL TOLERANCES (UNLESS SPECIFIED)

	MM	INCH
4 PLACES	±	±
3 PLACES	±	± 0.01
2 PLACES	± 0.25	± 0.015
1 PLACE	± 0.38	±
0 PLACES	±	±
ANGULAR TOL	± 0.5 °	

DRAFT WHERE APPLICABLE MUST REMAIN WITHIN DIMENSIONS

CURRENT REV DESC: NOTE 11 ADDED

EC NO: 620875
DRWN: KSUTAR 2019/07/18
CHK'D: ISHWARG 2019/07/18
APPR: ISHWARG 2019/07/18

INITIAL REVISION:
DRWN: JSCHAFER 11-07-03
APPR: MARGULIS 11-17-03

THIRD ANGLE PROJECTION

DRAWING: B-SIZE
SERIES: 41792

molex

KK .156 HEADER ASSEMBLY
FRICTION LOCK RIGHT ANGLE W/O PEGS

PRODUCT CUSTOMER DRAWING

DOCUMENT NUMBER	DOC TYPE	DOC PART	REVISION
SDA-41792	PSD	000	K7

MATERIAL NUMBER	CUSTOMER	SHEET NUMBER
SEE CHART	GENERAL MARKET	5 OF 8

DOCUMENT STATUS	P1	RELEASE DATE	2019/07/18 08:33:56

FORMAT: Eng-lega-mem-prod-B
REVISION: D
DATE: 2018/01/18

41792

OPTIONS								
	Group	A-41792-0596/0612	Group	A-41792-0613/0629	Group	A-41792-0484/0493	Group	A-41792-0653
	Header No:	41790-0007/0018	Header No:	41790-0009/0018	Header No:	41790-0009/0018	Header No:	41790-0005/0018
	Pin No:	43294-0571	Pin No:	43294-0571	Pin No:	43294-0571	Pin No:	43294-0570
	Plating:	154 – TIN	Plating:	154 – TIN	Plating:	154 – TIN	Plating:	228 – 30 GOLD
	Pin Length L	27.94 / 1.100	Pin Length L	27.94 / 1.100	Pin Length L	27.94 / 1.100	Pin Length L	27.94 / 1.100
	Mating M	11.43 / .450	Mating M	11.43 / .450	Mating M	11.43 / .450	Mating M	11.43 / .450
	Gold Loc G	N/A	Gold Loc G	N/A	Gold Loc G	N/A	Gold Loc G	6.86/ .270
	Height Y	5.41 / .213	Height Y	5.41 / .213	Height Y	5.41 / .213	Height Y	5.41 / .213
	PC Tail P	3.96 / .156	PC Tail P	3.96 / .156	PC Tail P	3.96 / .156	PC Tail P	3.96/ .156
	Tin Loc T	OVERALL	Tin Loc T	OVERALL	Tin Loc T	OVERALL	Tin Loc T	5.08/ .200
	Voided Ckts	2, 7	Voided Ckts	2, 5, 9	Voided Ckts	2, 5, 9	Voided Ckts	2, 5
	Pack Per	PK-41792-002	Pack Per	PK-41792-002	Pack Per	PK-41792-002	Pack Per	PK-41792-002
Ckts	Material No	Engineer Number	Material No	Engineer Number	Material No	Engineer Number	Material No	Engineer Number
2								
3								
4								
5								
6							41792-0653	A-41792-0653
7	50-29-1926	A-41792-0601						
8	50-29-1927	A-41792-0602						
9	50-29-1928	A-41792-0603	50-29-1945	A-41792-0620		A-41792-0630		
10	50-29-1929	A-41792-0604	50-29-1946	A-41792-0621		A-41792-0631		
11	50-29-1930	A-41792-0605	50-29-1947	A-41792-0622		A-41792-0632		
12	50-29-1931	A-41792-0606	50-29-1948	A-41792-0623	41792-0633	A-41792-0633		
13	50-29-1932	A-41792-0607	50-29-1949	A-41792-0624		A-41792-0634		
14	50-29-1933	A-41792-0608	50-29-1950	A-41792-0625		A-41792-0635		
15	50-29-1934	A-41792-0609	50-29-1951	A-41792-0626		A-41792-0636		
16	50-29-1935	A-41792-0610	50-29-1952	A-41792-0627		A-41792-0637		
17	50-29-1936	A-41792-0611	50-29-1953	A-41792-0628		A-41792-0638		
18	50-29-1937	A-41792-0612	50-29-1954	A-41792-0629		A-41792-0639		

SYMBOLS

= 0
= 0
= 0
= 0
= 0
= 0
= 0
= 0
= 0
= 0

THIS DRAWING CONTAINS INFORMATION THAT IS PROPRIETARY TO MOLEX ELECTRONIC TECHNOLOGIES, LLC AND SHOULD NOT BE USED WITHOUT WRITTEN PERMISSION

DIMENSION UNITS: mm/in
SCALE

GENERAL TOLERANCES (UNLESS SPECIFIED)

	MM	INCH
4 PLACES	±	±
3 PLACES	±	± 0.01
2 PLACES	± 0.25	± 0.015
1 PLACE	± 0.38	±
0 PLACES	±	±
ANGULAR TOL	± 0.5 °	

DRAFT WHERE APPLICABLE MUST REMAIN WITHIN DIMENSIONS

CURRENT REV DESC: NOTE 11 ADDED

EC NO: 620875
DRWN: KSUTAR 2019/07/18
CHK'D: ISHWARG 2019/07/18
APPR: ISHWARG 2019/07/18

INITIAL REVISION:
DRWN: JSCHAFER 11-07-03
APPR: MARGULIS 11-17-03

THIRD ANGLE PROJECTION

molex

KK .156 HEADER ASSEMBLY
FRICTION LOCK RIGHT ANGLE W/O PEGS

PRODUCT CUSTOMER DRAWING

DOCUMENT NUMBER	DOC TYPE	DOC PART	REVISION
SDA-41792	PSD	000	K7

DRAWING	SERIES	MATERIAL NUMBER	CUSTOMER	SHEET NUMBER
B-SIZE	41792	SEE CHART	GENERAL MARKET	6 OF 8

DOCUMENT STATUS	P1	RELEASE DATE	2019/07/18 08:33:56

FORMAT: Eng-lega-mem-prod-B
REVISION: D
DATE: 2018/01/18

41792

OPTIONS								
	Group	A-41792-0667	Group	A-41792-0677	Group	A-41792-0690	Group	A-41792-0698
	Header No:	41790-0009/0018	Header No:	41790-0011/0018	Header No:	41790-0006/0018	Header No:	41790-0013/0018
	Pin No:	43294-0570	Pin No:	43294-0570	Pin No:	43294-0570	Pin No:	43294-0572
	Plating:	228 – 30 GOLD	Plating:	228 – 30 GOLD	Plating:	228 – 30 GOLD	Plating:	197 – TIN
	Pin Length L	27.94 / 1.100	Pin Length L	27.94 / 1.100	Pin Length L	27.94 / 1.100	Pin Length L	27.94 / 1.100
	Mating M	11.43 / .450	Mating M	11.43 / .450	Mating M	11.43 / .450	Mating M	11.43 / .450
	Gold Loc G	6.86/ .270	Gold Loc G	6.86/ .270	Gold Loc G	6.86/ .270	Gold Loc G	N/A
	Height Y	5.41 / .213	Height Y	5.41 / .213	Height Y	5.41 / .213	Height Y	5.41 / .213
	PC Tail P	3.96/ .156	PC Tail P	3.96/ .156	PC Tail P	3.96/ .156	PC Tail P	3.96/ .156
	Tin Loc T	5.08/ .200	Tin Loc T	5.08/ .200	Tin Loc T	5.08/ .200	Tin Loc T	OVERALL
	Voided Ckts	2, 3, 5, 6, 8, 9	Voided Ckts	7, 9, 11	Voided Ckts	2, 4, 6	Voided Ckts	2, 6, 11, 13
	Pack Per	PK-41792-002	Pack Per	PK-41792-002	Pack Per	PK-41792-002	Pack Per	PK-41792-002
Ckts	Material No	Engineer Number	Material No	Engineer Number	Material No	Engineer Number	Material No	Engineer Number
2								
3								
4								
5								
6								
7								
8								
9								
10	41792-0667	A-41792-0667						
11								
12			41792-0677	A-41792-0677	41792-0690	A-41792-0690		
13								
14							41792-0698	A-41792-0698
15								
16								
17								
18								

SYMBOLS: E = 0; E = 0; E = 0; S = 0; ▼ = 0; C = 0; ☒ = 0; ■ = 0; ▽ = 0

THIS DRAWING CONTAINS INFORMATION THAT IS PROPRIETARY TO MOLEX ELECTRONIC TECHNOLOGIES, LLC AND SHOULD NOT BE USED WITHOUT WRITTEN PERMISSION

DIMENSION UNITS: mm/in
SCALE

GENERAL TOLERANCES (UNLESS SPECIFIED)

	MM	INCH
4 PLACES	±	±
3 PLACES	±	± 0.01
2 PLACES	± 0.25	± 0.015
1 PLACE	± 0.38	±
0 PLACES	±	±
ANGULAR TOL	± 0.5 °	

DRAFT WHERE APPLICABLE MUST REMAIN WITHIN DIMENSIONS

CURRENT REV DESC: NOTE 11 ADDED

EC NO: 620875
DRWN: KSUTAR 2019/07/18
CHK'D: ISHWARG 2019/07/18
APPR: ISHWARG 2019/07/18

INITIAL REVISION:
DRWN: JSCHAFER 11-07-03
APPR: MARGULIS 11-17-03

THIRD ANGLE PROJECTION

molex

KK .156 HEADER ASSEMBLY
FRICTION LOCK RIGHT ANGLE W/O PEGS

PRODUCT CUSTOMER DRAWING

DOCUMENT NUMBER	DOC TYPE	DOC PART	REVISION
SDA-41792	PSD	000	K7

DRAWING	SERIES	MATERIAL NUMBER	CUSTOMER	SHEET NUMBER
B-SIZE	41792	SEE CHART	GENERAL MARKET	7 OF 8

DOCUMENT STATUS	P1	RELEASE DATE	2019/07/18 08:33:56

FORMAT: Eng-lega-matrix-prod-B
REVISION: D
DATE: 2018/01/18

41792

OPTIONS								
	Group	A-41792-0704	Group		Group		Group	
	Header No:	41790-0005/0018	Header No:		Header No:		Header No:	
	Pin No:	43294-0572	Pin No:		Pin No:		Pin No:	
	Plating:	197 – TIN	Plating:		Plating:		Plating:	
	Pin Length L	27.94 / 1.100	Pin Length L		Pin Length L		Pin Length L	
	Mating M	11.43 / .450	Mating M		Mating M		Mating M	
	Gold Loc G	N/A	Gold Loc G		Gold Loc G		Gold Loc G	
	Height Y	5.41 / .213	Height Y		Height Y		Height Y	
	PC Tail P	3.96/ .156	PC Tail P		PC Tail P		PC Tail P	
	Tin Loc T	OVERALL	Tin Loc T		Tin Loc T		Tin Loc T	
	Voided Ckts	2, 3, 5	Voided Ckts		Voided Ckts		Voided Ckts	
	Pack Per	PK-41792-002	Pack Per		Pack Per		Pack Per	
Ckts	Material No	Engineer Number	Material No	Engineer Number	Material No	Engineer Number	Material No	Engineer Number
2								
3								
4								
5								
6	41792-0704	A-41792-0704						
7								
8								
9								
10								
11								
12								
13								
14								
15								
16								
17								
18								

THIS DRAWING CONTAINS INFORMATION THAT IS PROPRIETARY TO MOLEX ELECTRONIC TECHNOLOGIES, LLC AND SHOULD NOT BE USED WITHOUT WRITTEN PERMISSION

SYMBOLS: E = 0; E = 0; E = 0; S = 0; ▼ = 0; C = 0; ☒ = 0; ■ = 0; ▽ = 0

DIMENSION UNITS: mm/in

SCALE

GENERAL TOLERANCES (UNLESS SPECIFIED)

	MM	INCH
4 PLACES	±	±
3 PLACES	±	± 0.01
2 PLACES	± 0.25	± 0.015
1 PLACE	± 0.38	±
0 PLACES	±	±
ANGULAR TOL	± 0.5 °	

DRAFT WHERE APPLICABLE MUST REMAIN WITHIN DIMENSIONS

CURRENT REV DESC: NOTE 11 ADDED

EC NO: 620875
DRWN: KSUTAR 2019/07/18
CHK'D: ISHWARG 2019/07/18
APPR: ISHWARG 2019/07/18

INITIAL REVISION:
DRWN: JSCHAFER 11-07-03
APPR: MARGULIS 11-17-03

THIRD ANGLE PROJECTION

DRAWING: B-SIZE
SERIES: 41792

molex

KK .156 HEADER ASSEMBLY
FRICTION LOCK RIGHT ANGLE W/O PEGS

PRODUCT CUSTOMER DRAWING

DOCUMENT NUMBER	DOC TYPE	DOC PART	REVISION
SDA-41792	PSD	000	K7

MATERIAL NUMBER	CUSTOMER	SHEET NUMBER
SEE CHART	GENERAL MARKET	8 OF 8

DOCUMENT STATUS	P1	RELEASE DATE	2019/07/18 08:33:56

FORMAT: Eng-lega-mgmt-prod-B
REVISION: D
DATE: 2018/01/18

Mouser Electronics

Authorized Distributor

Click to View Pricing, Inventory, Delivery & Lifecycle Information:

Molex:
50-29-1904