THIS DRAWING IS UNPUBLISHED. RELEASED FOR PUBLICATION -,- .
© COPYRIGHT - BY TYCO ELECTRONICS CORPORATION. ALL RIGHTS RESERVED.

LOC	DIST
AD	00

REVISIONS

P	LTR	DESCRIPTION	DATE	DWN	APVD
	R1	ECO-05-016271	25FEB06	BSV	JR
	R2	REVISED PER ECO-09-020774	22AUG09	KK	AEG

1. THE TIPS OF THE POSTS WILL NOT BE PLATED.
2. THE NOTED DIMENSIONS APPLY AT THE INTERSECTION OF THE POST AND THE HOUSING.
3. .000050-.000150 BRIGHT TIN-LEAD.
4. .000050-.000150 MATTE TIN.
5. ROHS 2002/95/EC COMPLIANT.
6. OBSOLETE PARTS: OBSOLETE CIS STREAMLINING PER D.RENAUD/D.SINISI

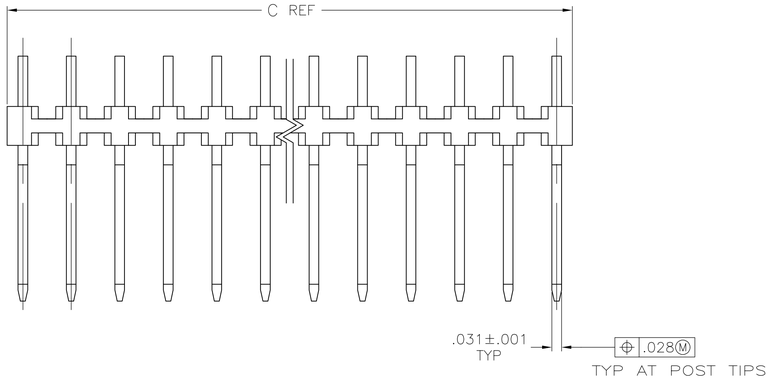

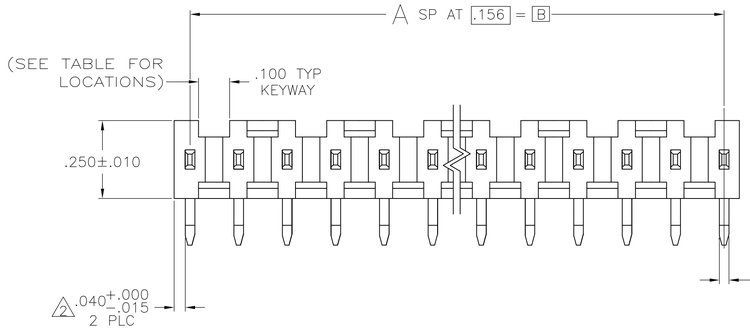

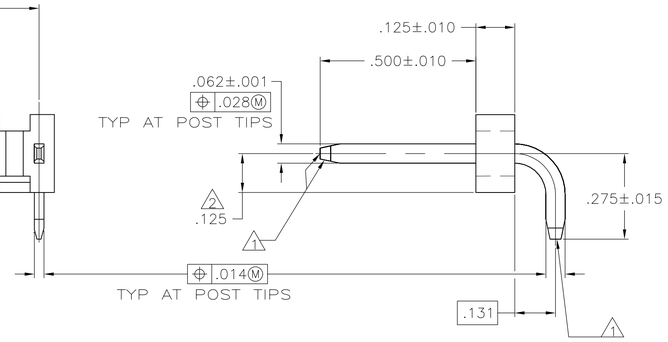

OBSOLETE 6	4	A,C,E,H,K,M,Q,S,U,W,Y	11	3.855	3.744	24	25	5 ~~7-87194-4~~
	4	A,C,E,G,J,L,N,Q,S,U,W,Y	12	3.699	3.588	23	24	5 ~~7-87194-3~~
	4	A,D,G,K,N,R,U,X	8	3.543	3.432	22	23	5 ~~7-87194-2~~
	4	A,C,E,G,J,L,N,Q,S,U,W	11	3.387	3.276	21	22	5 ~~7-87194-1~~
	4	A,D,G,K,N,R,U	7	3.231	3.120	20	21	5 ~~7-87194-0~~
	4	A,C,E,G,J,L,N,Q,S,U	10	3.075	2.964	19	20	5 ~~6-87194-9~~
	4	B,D,F,J,L,N,Q,S	8	2.919	2.808	18	19	5 ~~6-87194-8~~
	4	A,D,F,J,M,P,S	7	2.763	2.652	17	18	5 ~~6-87194-7~~
	4	A,D,G,K,N,R	6	2.607	2.496	16	17	5 ~~6-87194-6~~
	4	A,C,E,G,J,L,N,Q	8	2.451	2.340	15	16	5 ~~6-87194-5~~
	4	A,D,G,K,N	5	2.295	2.184	14	15	5 ~~6-87194-4~~
	4	A,C,E,G,J,L,N	7	2.139	2.028	13	14	5 ~~6-87194-3~~
	4	A,D,J,M	4	1.983	1.872	12	13	5 ~~6-87194-2~~
	4	A,C,E,G,J,L	6	1.827	1.716	11	12	5 ~~6-87194-1~~
	4	A,D,G,K	4	1.671	1.560	10	11	5 ~~6-87194-0~~
	4	A,C,E,G,J	5	1.515	1.404	9	10	5 ~~5-87194-9~~
	4	A,D,G	3	1.359	1.248	8	9	5 ~~5-87194-8~~
	4	A,C,E,G	4	1.203	1.092	7	8	5 ~~5-87194-7~~
	4	A,C,E	3	1.047	.936	6	7	5 ~~5-87194-6~~
	4	A,C,E	3	.891	.780	5	6	5 5-87194-5
	4	A,D	2	.735	.624	4	5	5 5-87194-4
OBSOLETE	4	A,C	2	.579	.468	3	4	5 ~~5-87194-3~~
	4	A	1	.423	.312	2	3	5 ~~5-87194-2~~
	4	A	1	.267	.156	1	2	5 ~~5-87194-1~~
	3	A,C,E,H,K,M,Q,S,U,W,Y	11	3.855	3.744	24	25	6 ~~2-87194-4~~
	3	A,C,E,G,J,L,N,Q,S,U,W,Y	12	3.699	3.588	23	24	6 ~~2-87194-3~~
	3	A,D,G,K,N,R,U,X	8	3.543	3.432	22	23	6 ~~2-87194-2~~
	3	A,C,E,G,J,L,N,Q,S,U,W	11	3.387	3.276	21	22	6 ~~2-87194-1~~
	3	A,D,G,K,N,R,U	7	3.231	3.120	20	21	6 ~~2-87194-0~~
	3	A,C,E,G,J,L,N,Q,S,U	10	3.075	2.964	19	20	6 ~~1-87194-9~~
	3	B,D,F,J,L,N,Q,S	8	2.919	2.808	18	19	6 ~~1-87194-8~~
	3	A,D,F,J,M,P,S	7	2.763	2.652	17	18	6 ~~1-87194-7~~
	3	A,D,G,K,N,R	6	2.607	2.496	16	17	6 ~~1-87194-6~~
	3	A,C,E,G,J,L,N,Q	8	2.451	2.340	15	16	6 ~~1-87194-5~~
	3	A,D,G,K,N	5	2.295	2.184	14	15	6 ~~1-87194-4~~
	3	A,C,E,G,J,L,N	7	2.139	2.028	13	14	6 ~~1-87194-3~~
	3	A,D,J,M	4	1.983	1.872	12	13	1-87194-2
OBSOLETE	3	A,C,E,G,J,L	6	1.827	1.716	11	12	6 ~~1-87194-1~~
	3	A,D,G,K	4	1.671	1.560	10	11	6 ~~1-87194-0~~
	3	A,C,E,G,J	5	1.515	1.404	9	10	6 ~~87194-9~~
	3	A,D,G	3	1.359	1.248	8	9	6 ~~87194-8~~
	3	A,C,E,G	4	1.203	1.092	7	8	6 ~~87194-7~~
	3	A,C,E	3	1.047	.936	6	7	6 ~~87194-6~~
	3	A,C,E	3	.891	.780	5	6	87194-5
	3	A,D	2	.735	.624	4	5	87194-4
OBSOLETE	3	A,C	2	.579	.468	3	4	6 ~~87194-3~~
	3	A	1	.423	.312	2	3	6 ~~87194-2~~
	3	A	1	.267	.156	1	2	6 ~~87194-1~~
FINISH	KEYWAY LOCATIONS	NO OF KEYWAY	C	B	A	NO OF POSN	ASSEMBLY PART NUMBER	

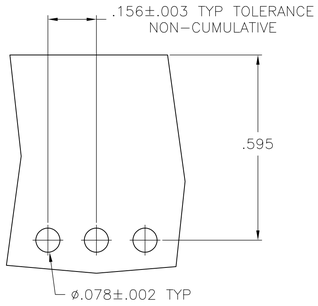

TO SUPPORT MATING CONNECTOR ON BOARD

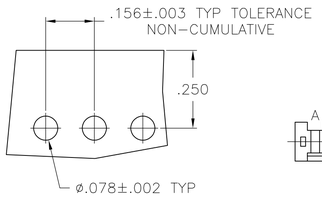

FOR MOUNTING HEADER FLUSH TO BOARD EDGE

RECOMMENDED BOARD LAYOUTS

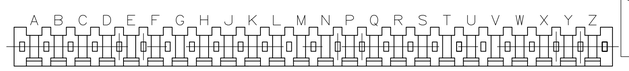

KEYWAY LOCATIONS (REF-SEE TABLE)
(MATING LENGTH OF POST ON NEAR SIDE)
SCALE: 2:1

THIS DRAWING IS A CONTROLLED DOCUMENT.

DIMENSIONS: INCHES

TOLERANCES UNLESS OTHERWISE SPECIFIED:
0 PLC ± -
1 PLC ± -
2 PLC ± -
3 PLC ± .005
4 PLC ± -
ANGLES ± -

MATERIAL: HOUSING - FLAME RETARDANT THERMOPLASTIC, COLOR-BLACK POSTS-BRASS

FINISH: SEE TABLE

DWN L A MAYER 14APR87
CHK P deJONG 19MAY87
APVD P deJONG 19MAY87

PRODUCT SPEC 108-25016
APPLICATION SPEC -
WEIGHT -

Tyco Electronics
Tyco Electronics Corporation
Harrisburg, Pa 17105-3608

NAME: HEADER ASSEMBLY, MOD I, RIGHT ANGLE, SINGLE ROW, .156CL

SIZE A1 | CAGE CODE 00779 | DRAWING NO C-87194 | RESTRICTED TO -

CUSTOMER DRAWING | SCALE 4:1 | SHEET 1 OF 1 | REV R2

Mouser Electronics

Authorized Distributor

Click to View Pricing, Inventory, Delivery & Lifecycle Information:

TE Connectivity:
87194-5