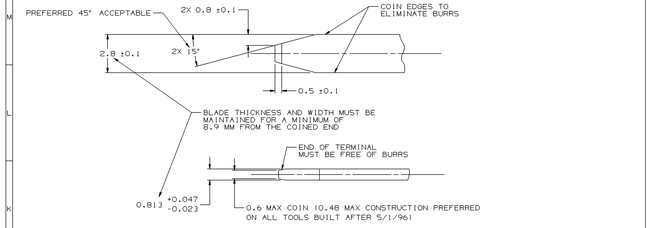

MATERIAL SPECIFICATION

RECOMMENDED -
BASE METAL - CDA-210, GILDING, EXTRA SPRING TEMPER
PLATING - 0.0050 ± 0.0025 MM THK TIN

MINIMUMS -
ELECTRICAL CONDUCTIVITY - ≥ 20% IACS AT 20°C. USE OF A MATERIAL WITH CONDUCTIVITY < 20% IACS MUST BE APPROVED BY DELPHI PACKARD ELECTRIC MATERIALS ENGINEERING.

TENSILE STRENGTH - 407 MPa
PLATING - FOR LOW ENERGY (≤ 5V) AND NON-PASSENGER COMPARTMENT POWER CIRCUITS, 0.0050 ±0.0025 MM THICK TIN. FOR MATERIALS CONTAINING 10% OR MORE ZINC, AN UNDERPLATE OF COPPER 0.0050 ±0.0025 MM THICK IS REQUIRED.

BLADE THICKNESS -
UNPLATED : 0.813 ± 0.025
TIN PLATED : 0.823 ± 0.030

MATING BLADE INFORMATION

SCALE 10:1

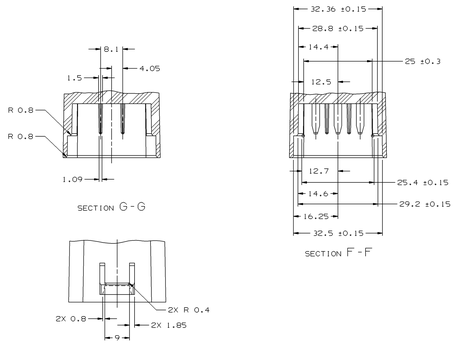

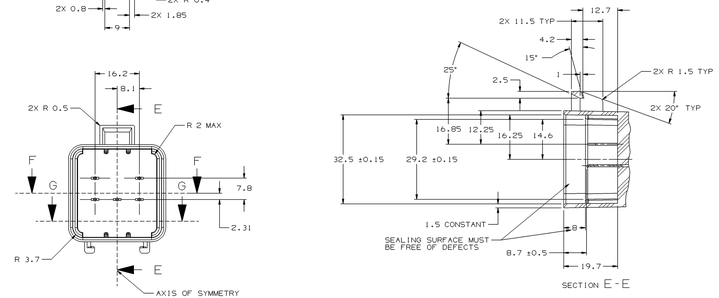

MATING SHROUD REQUIREMENTS

REQUEST THE LATEST INFORMATION FOR THE MATING SHROUD FROM DELPHI PACKARD ELECTRIC
SEE NOTE 1

DRAWING NUMBER							
12110539							
SIZE	SCALE	FRAME NO	SHEET NO	STG	REV	N/P	
A1x3	2:1	2 OF 2	1 OF 1	R	06	-	

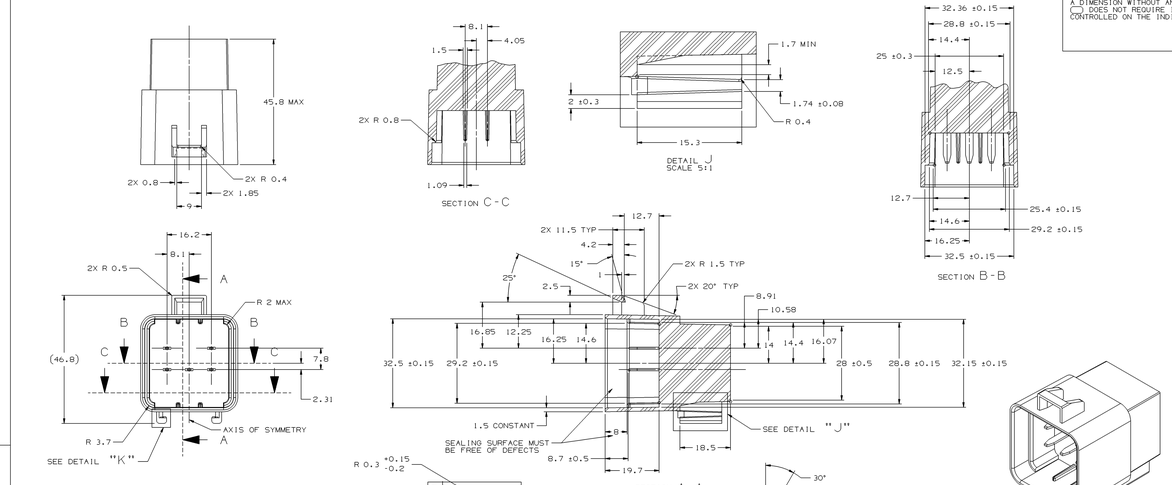

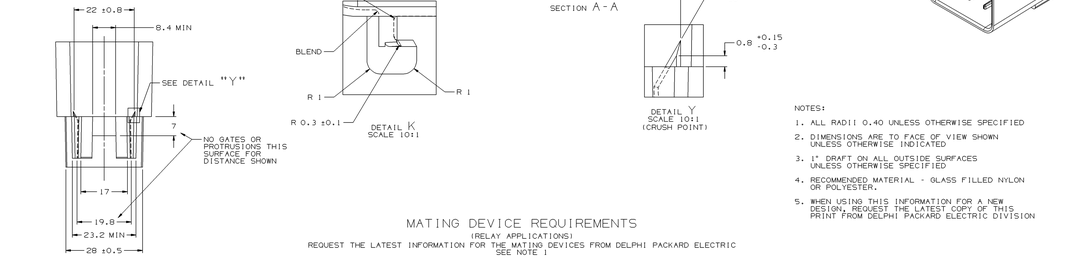

MATING DEVICE REQUIREMENTS

(RELAY APPLICATIONS)
REQUEST THE LATEST INFORMATION FOR THE MATING DEVICES FROM DELPHI PACKARD ELECTRIC
SEE NOTE 1

NOTES:

1. ALL RADII 0.40 UNLESS OTHERWISE SPECIFIED
2. DIMENSIONS ARE TO FACE OF VIEW SHOWN UNLESS OTHERWISE INDICATED
3. 1° DRAFT ON ALL OUTSIDE SURFACES UNLESS OTHERWISE SPECIFIED
4. RECOMMENDED MATERIAL - GLASS FILLED NYLON OR POLYESTER.
5. WHEN USING THIS INFORMATION FOR A NEW DESIGN, REQUEST THE LATEST COPY OF THIS PRINT FROM DELPHI PACKARD ELECTRIC DIVISION

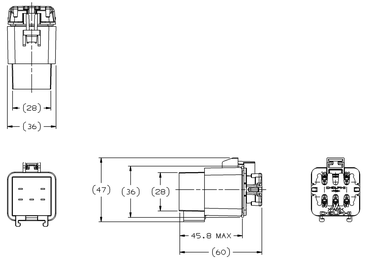

280 SEALED RELAY ASSEMBLED DIMENSIONS

SCALE 1:1

SYMBOL DEFINITION		
A DIMENSION WITHOUT AN INSPECTION REPORT SYMBOL (□) DOES NOT REQUIRE INSPECTION. IT MAY BE CONTROLLED ON THE INDIVIDUAL COMPONENT DRAWING.	TOTAL NO OF INSPECTIONS REQUIRED	5
	LAST NO. USED	5

MISSING SYMBOLS
NO MISSING SYMBOL NUMBER

DWG STATUS					ZONE	REVISION HISTORY	AUTH	DR	APVD	APVD
DATE	STG	REV	N/P	CHG					R	S
24JA05	R	06	-	-		CLEARED REVISION COLUMNS CONNECTOR SEAL WAS 12047844-3 REMOVED SECTION D-D REVISED DIMENSION TO LATEST DRAWING STANDARDS1 ADDED NOTE 10	26J412	RH	RH	MR

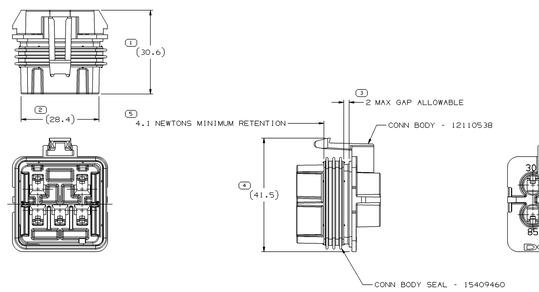

NOTES:

1. MATING COMPONENT DIMENSIONS SHOWN ARE REFERENCE ONLY. WHEN USING THIS INFORMATION FOR NEW DESIGN, REQUEST THE LATEST MATING INFORMATION FROM DELPHI PACKARD ELECTRIC. REVIEW LATEST MATING SHROUD & DEVICE COMPONENT PRINTS FOR ACTUAL DIMENSIONS.
2. CAVITIES TO ACCEPT 12129409 TERMINAL OR EQUIVALENT, MAXIMUM CABLE DIAMETER 3.65 MM
3. WHEN PARTS ARE SHIPPED, THEY MUST BE PACKED IN EITHER PLASTIC BAGS OR SHIPPING CONTAINERS LINED WITH PLASTIC LINERS. BAGS OR LINERS MUST BE SEALED TO AVOID ENTRY OF FOREIGN MATTER
4. CONNECTOR ACCEPTS CPA 12052834 OR EQUIVALENT
5. FOR LEAD LENGTH CALCULATIONS, DISTANCE FROM MATING END OF CONNECTOR TO FRONT OF CABLE CORE IS 15.05/11.65
6. SEALING CODE 3 - DESIGN WILL PASS SALT FOG AND IMMERSION TEST AFTER CONDITIONING AS SPECIFIED IN ESA-644 (WEATHER-PACK), ESA-710 (METRI-PACK), ESA-650 (UNDERHOOD MICRO-PACK), C-4006 (WORLD CONNECTOR), ETC WHEN MATED TO MATING PART OR EQUIVALENT
7. CONNECTOR TO ACCEPT 12110540 TPA OR EQUIVALENT
8. CAVITIES TO ACCEPT CABLE SEAL 12015323 OR EQUIVALENT
9. UNLESS OTHERWISE SPECIFIED AND/OR INDICATED: DIMENSIONS ARE TO FACE OF VIEW SHOWN AND AUTOMATICALLY ROUNDED BY COMPUTER FOR INSPECTION (SEE MATH MODEL FOR PRECISE DIMENSIONS)
10. NO PROCESSING OIL ALLOWED TO BE ADDED TO AID IN THE APPLICATION OF THE SEAL TO THE CONNECTOR

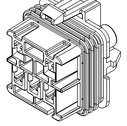

(3) PROCESS SENSITIVE DIMENSION	REFERENCE
DIMENSIONS ENCLOSED IN PARENTHESIS REFERENCE DIMENSIONS AND NO TOLERANCE LIMITS ARE ESTIMATED.	

DIMENSIONAL RANGE (MM)								
FROM	0.00	6.00	30	120	>100	>200	>300	>400
TO	30	120	400	100	200	300	400	500
TOLERANCE UNLESS OTHERWISE SPECIFIED								
±0.15	±0.2	±0.3	±0.4	±0.5	±0.6	±1	±1.2	
ANGULAR TOLERANCE ±2°								

THIRD ANGLE PROJECTION

DO NOT SCALE

USE MATH DATA

DELPHI

DELPHI PACKARD ELECTRIC SYSTEMS
WARREN, OH

	DATE
DR	
APVD1 M.A. CHAPIN	15DEC95
APVD2 MARK KOTY	09JUN00
APVD3 J. GABRIEC	1MAY01
APVD4	
APVD5	

SUBSTANCES OF CONCERN AND RECYCLED CONTENT PER DELPHI 10949001

MATERIAL
SEE DRAWING

DRAWING NAME
ASM CONN 5 F M/P 280 BLK SLDFLXLK

PART DRAWING

UNLESS OTHERWISE SPECIFIED
THIS DOCUMENT IS IN ACCORDANCE WITH ASME Y14.5M 1994 UNLESS OTHERWISE SPECIFIED. DIMENSIONS ARE TO FACE OF VIEW SHOWN. SURFACE FINISHES OF FEATURES MAY BE RAISED TEMPORARILY REGARDLESS OF DATUM REFERENCE.

ALL DIMENSIONS ARE IN MILLIMETERS

DRAWING NUMBER							
12110539							
SIZE	SCALE	FRAME NO	SHEET NO	STG	REV	N/P	
A1x3	2:1	1 OF 2	1 OF 1	R	06	-	

ISI 0236

Mouser Electronics

Authorized Distributor

Click to View Pricing, Inventory, Delivery & Lifecycle Information:

Aptiv:
12110539