PRODUCT NO.	COLOR
10042618-001	DELL GREEN
10042618-002	BLUE
10042618-001LF	DELL GREEN
10042618-002LF	BLUE
10042618-003LF	BLACK

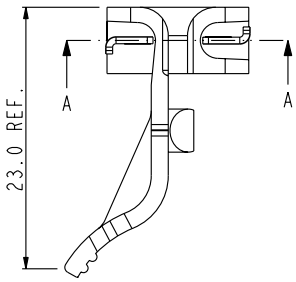

NOTES:

1. MATERIAL:
   HOUSING: HIGH TEMPERATURE NYLON, UL94V-0 RATED.
   SUITABLE FOR WAVE SOLDERING. AND WITHSTAND
   EXPOSURE TO 260°C±5°C SOLDER BATH TEMPERATURE
   FOR 5 SECONDS.
   COLOR: DELL GREEN.
   SOLDER PIN: COPPER ALLOY.
   PLATING: 50u" NICKEL UNDERPLATE ALL OVER 100u" TIN
2. RECOMMENDED PC BOARD THICKNESS OF 1.57 mm.
3. P/N : SEE TABLE
4. THIS PRODUCT IS COMPATIBLE RoHS.

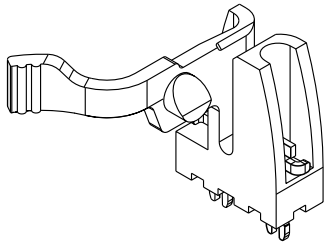

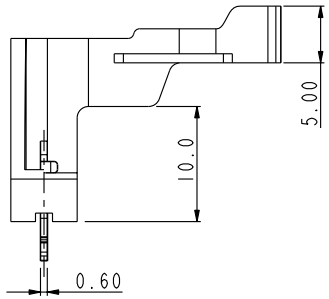

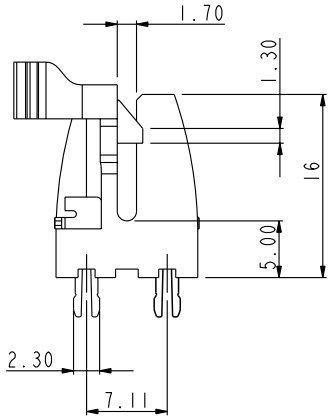

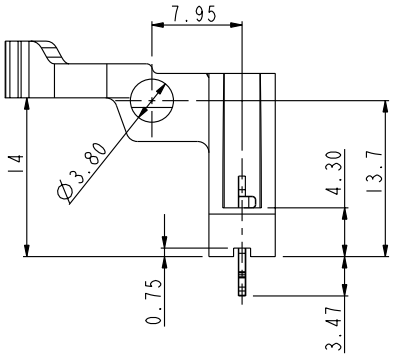

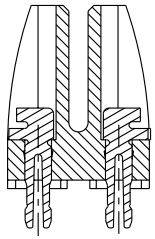

SECTION A-A
SCALE 1.500

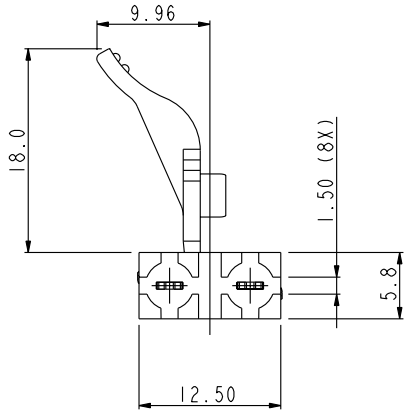

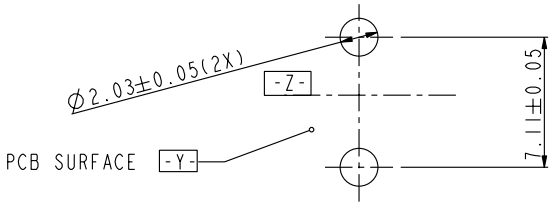

RECOMMENDED FOOTPRINT

tomerance unless otherwise specified	
linear	.X ± .3
	.XX ± .2
	.XXX ± .1
angles	0° ± 2°

rev	ecn no	dr	date
A	T04-0331	M W	07/21/04
B	T04-0364	M W	09/03/04
C	T04-0391	M W	10/13/04
D	T05-0102	M W	05/11/05
E	T05-0110	M W	05/24/05
F	T05-0262	M W	11/14/05
-	-	-	-

FCI www.fciconnect.com

tolerance

projection

MM

Dr	MAGGIE WU	07/02/04	Product family
Eng	R Y LIU	07/02/04	Spec ref
Chr	PAUL WANG	07/02/04	Material
Appr	JOSEPH HSIA	07/02/04	

size A4 | Scale 1.000

ECN T05-0262

title: PCI EXPRESS RETENTION MECHANISM ASS'Y

dwg no 10042618 | Rev. F

catalog no | CUSTOMER DRAWING | sheet 1 of 1

Tous droits strictement reserves. Reproduction ou communication a des tiers interdite sous quelque forme que ce soit sans autorisation ecrite du propietaire. Propriete de c FCI. Droits de reproduction FCI.

All rights strictly reserved. Reproduction or issue to third parties in any form whatever is not permitted without written authority from the proprietor. Property of FCI. Copyright FCI.

PDM: Rev:F STATUS: Released Printed: Aug 02, 2008

Mouser Electronics

Authorized Distributor

Click to View Pricing, Inventory, Delivery & Lifecycle Information:

FCI / Amphenol:

10042618-001 10042618-001LF 10042618-002 10042618-002LF 10042618-003LF 10042618-004HLF