VND5T035LAK-E

Double channel high-side driver with analog current sense for 24 V automotive applications

Datasheet — production data

Features

Max transient supply voltage	V_{CC}	58 V
Operating voltage range	V_{CC}	8 to 36 V
Typ on-state resistance (per ch.)	R_{ON}	35 mΩ
Current limitation (typ)	I_{LIM}	42 A
Off-state supply current	I_S	2 µA

- General
  - Very low standby current
  - 3.0 V CMOS compatible input
  - Optimized electromagnetic emission
  - Very low electromagnetic susceptibility
  - In compliance with the 2002/95/EC European directive
  - Fault reset standby pin (FR_Stby)
  - Optimized for LED application
- Diagnostic functions
  - Proportional load current sense
  - High current sense precision for wide range currents
  - Off-state open load detection
  - Output short to V_{CC} detection
  - Overload and short to ground latch off
  - Thermal shutdown latch-off
  - Very low current sense leakage
- Protections
  - Undervoltage shutdown
  - Overvoltage clamp
  - Load current limitation
  - Self limiting of fast thermal transients
  - Protection against loss of ground and loss of V_{CC}
  - Thermal shutdown
  - Electrostatic discharge protection

Application

All types of resistive, inductive and capacitive loads

Description

The VND5T035LAK-E is a monolithic device made using STMicroelectronics® VIPower® technology, intended for driving resistive or inductive loads with one side connected to ground. Active V_{CC} pin voltage clamp protects the device against low energy spikes.

The device integrates an analog current sense which delivers a current proportional to the load current.

Fault conditions such as overload, overtemperature or short to V_{CC} are reported via the current sense pin.

Output current limitation protects the device in overload conditions. The device latches off in case of overload or thermal shutdown.

The device is reset by a low level pass on the fault reset standby pin.

A permanent low level on the inputs and on the fault reset standby pins disables all outputs and sets the device in standby mode.

This is information on a product in full production. www.st.com

Contents

1 Block diagram and pin description 5

2 Electrical specifications 7

2.1 Absolute maximum ratings 7

2.2 Thermal data 8

2.3 Electrical characteristics 9

2.4 Electrical characteristics curves 19

3 Application information 21

3.1 GND protection network against reverse battery 21

3.1.1 Solution 1: resistor in the ground line (RGND only) 21

3.1.2 Solution 2: diode (DGND) in the ground line 22

3.2 Load dump protection 22

3.3 MCU I/Os protection 22

3.4 Maximum demagnetization energy (V_{CC} = 24 V) 23

4 Package and PCB thermal data 24

4.1 PowerSSO-24 thermal data 24

5 Package and packing information 27

5.1 ECOPACK® 27

5.2 PowerSSO-24 package information 27

5.3 PowerSSO-24 packing information 29

6 Order codes 30

7 Revision history 31

List of tables

Table 1. Pin function . . . 5
Table 2. Suggested connections for unused and not connected pins . . . 6
Table 3. Absolute maximum ratings . . . 7
Table 4. Thermal data . . . 8
Table 5. Power section . . . 9
Table 6. Switching (VCC = 24 V; Tj = 25 °C) . . . 9
Table 7. Logic inputs . . . 10
Table 8. Protections and diagnostics . . . 11
Table 9. Current sense (8 V < V_{CC} < 36 V) . . . 12
Table 10. Open-load detection (V_{FR_Stby} = 5 V) . . . 13
Table 11. Truth table . . . 17
Table 12. Electrical transient requirements (part 1) . . . 18
Table 13. Electrical transient requirements (part 2) . . . 18
Table 14. Electrical transient requirements (part 3) . . . 18
Table 15. Thermal parameters . . . 26
Table 16. PowerSSO-24 mechanical data . . . 28
Table 17. Device summary . . . 30
Table 18. Document revision history . . . 31

List of figures

Figure 1. Block diagram . . . 5
Figure 2. Configuration diagram PowerSSO-24 (top view) . . . 6
Figure 3. Current and voltage conventions . . . 7
Figure 4. Treset definition . . . 10
Figure 5. Tstby definition . . . 11
Figure 6. Current sense delay characteristics . . . 14
Figure 7. Open-load off-state delay timing . . . 14
Figure 8. Switching characteristics . . . 14
Figure 9. Output stuck to V_{CC} detection delay time at FR_{STBY} activation . . . 15
Figure 10. Delay response time between rising edge of output current and rising edge of current sense . . . 15
Figure 11. Output voltage drop limitation . . . 16
Figure 12. Device behavior in overload condition . . . 16
Figure 13. Off-state output current . . . 19
Figure 14. High-level input current . . . 19
Figure 15. Input clamp voltage . . . 19
Figure 16. High-level input voltage . . . 19
Figure 17. Low-level input voltage . . . 19
Figure 18. Input hysteresis voltage . . . 19
Figure 19. On-state resistance vs T_{case} . . . 20
Figure 20. On-state resistance vs V_{CC} . . . 20
Figure 21. I_{LIMH} vs T_{case} . . . 20
Figure 22. Turn-on voltage slope . . . 20
Figure 23. Turn-off voltage slope . . . 20
Figure 24. Application schematic . . . 21
Figure 25. Maximum turn-off current versus inductance . . . 23
Figure 26. PowerSSO-24 PC board . . . 24
Figure 27. Rthj-amb vs PCB copper area in open box free air condition (one channel ON) . . . 24
Figure 28. PowerSSO-24 thermal impedance junction ambient single pulse (one channel ON) . . . 25
Figure 29. Thermal fitting model of a double channel HSD in PowerSSO-24(1) . . . 25
Figure 30. PowerSSO-24 package dimensions . . . 27
Figure 31. PowerSSO-24 tube shipment (no suffix) . . . 29
Figure 32. PowerSSO-24 tape and reel shipment (suffix “TR”) . . . 29

1 Block diagram and pin description

Figure 1. Block diagram

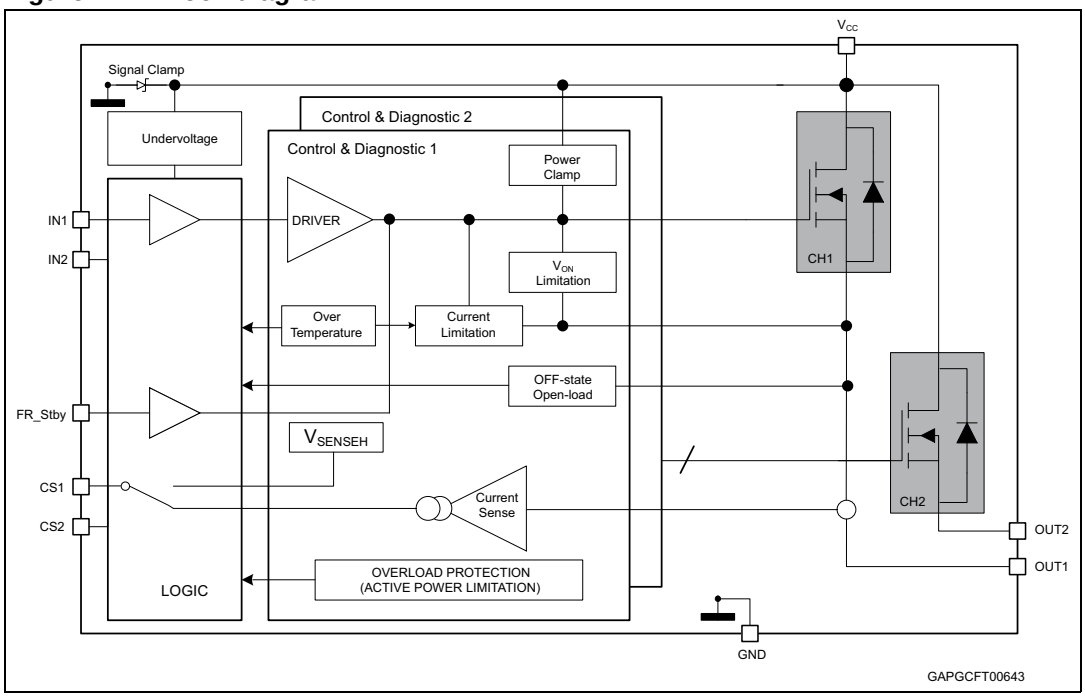

Table 1. Pin function

Name	Function
V_{CC}	Battery connection
OUTn	Power output
GND	Ground connection
INn	Voltage controlled input pin with hysteresis, CMOS compatible. It controls output switch state
CSn	Analog current sense pin; it delivers a current proportional to the load current
FR_Stby	In case of latch-off for overtemperature/overcurrent condition, a low pulse on the FR_Stby pin is needed to reset the channel. The device enters in standby mode if all inputs and the FR_Stby pin are low.

Figure 2. Configuration diagram PowerSSO-24 (top view)

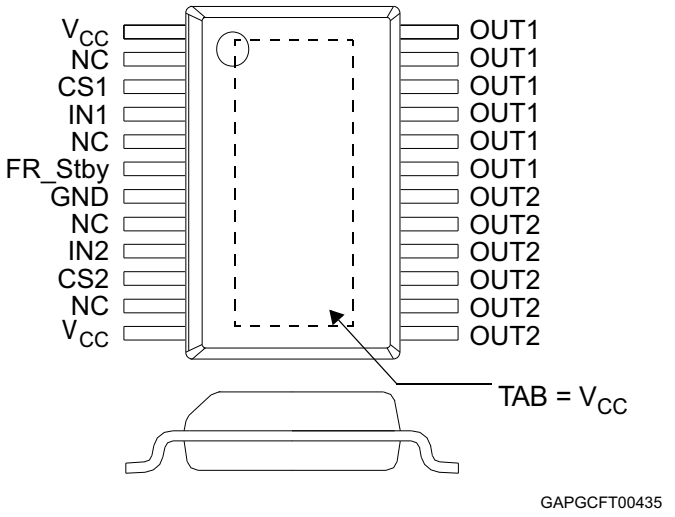

Table 2. Suggested connections for unused and not connected pins

Connection / pin	CurrentSense	N.C.	Output	Input	FR_Stby
Floating	Not allowed	X(1)	X	X	X
To ground	Through 10 KΩ resistor	X	Not allowed	Through 10 KΩ resistor	Through 10 KΩ

1. X: do not care.

2 Electrical specifications

Figure 3. Current and voltage conventions

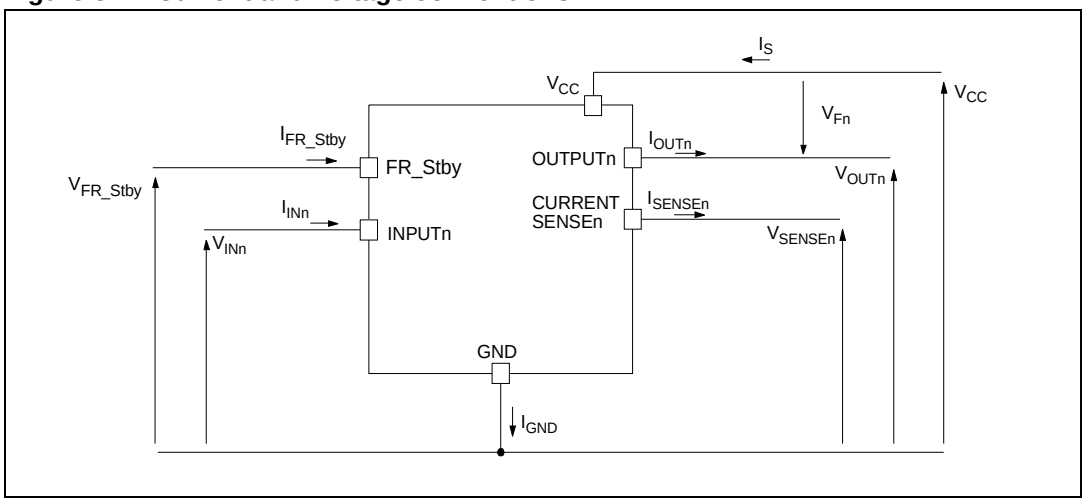

Note: *V_{Fn} = V_{OUTn} - V_{CC} during reverse battery condition.*

2.1 Absolute maximum ratings

Stressing the device above the ratings listed in *Table 3* may cause permanent damage to the device. These are stress ratings only and operation of the device at these or any other conditions above those indicated in the Operating sections of this specification is not implied.

Table 3. Absolute maximum ratings

Symbol	Parameter	Value	Unit
V_{CC}	DC supply voltage	58	V
$-V_{CC}$	Reverse DC supply voltage	0.3	V
$-I_{GND}$	DC reverse ground pin current	200	mA
I_{OUT}	DC output current	Internally limited	A
$-I_{OUT}$	Reverse DC output current	40	A
I_{IN}	DC input current	-1 to 10	mA
I_{FR_Stby}	Fault reset standby DC input current	-1 to 1.5	mA
$-I_{CSENSE}$	DC reverse CS pin current	200	mA
V_{CSENSE}	Current sense maximum voltage	V_{CC} - 58 to $+V_{CC}$	V
E_{MAX}	Maximum switching energy (L = 2.3 mH; V_{BAT} = 32 V; T_{jstart} = 150 °C; I_{OUT} = $I_{limL\ (typ)}$)	250	mJ

Table 3. Absolute maximum ratings (continued)

Symbol	Parameter	Value	Unit
L_{smax}	Maximum strain inductance in short circuit condition R_L = 300 mΩ, V_{BAT} = 32 V, T_{jstart} = 150 °C, I_{OUT} = I_{LMHmax}	40	µH
V_{ESD}	Electrostatic discharge (Human Body Model: R = 1.5 KΩ; C = 100 pF) – INPUT – CURRENT SENSE – FR_Stby – OUTPUT – V_{CC}	 4000 2000 4000 5000 5000	 V V V V V
V_{ESD}	Charge device model (CDM-AEC-Q100-011)	750	V
T_j	Junction operating temperature	-40 to 150	°C
T_{stg}	Storage temperature	-55 to 150	°C

2.2 Thermal data

Table 4. Thermal data

Symbol	Parameter	Value	Unit
$R_{thj\text{-}case}$	Thermal resistance junction-case (max) (with one channel ON)	2	°C/W
$R_{thj\text{-}amb}$	Thermal resistance junction-ambient (max)	See *Figure 27*	°C/W

2.3 Electrical characteristics

8 V < V_{CC} < 36 V; -40°C < T_j < 150°C, unless otherwise specified.

Table 5. Power section

Symbol	Parameter	Test conditions	Min.	Typ.	Max.	Unit
V_{CC}	Operating supply voltage		8	24	36	V
V_{USD}	Undervoltage shutdown			3.5	5	V
$V_{USDhyst}$	Undervoltage shutdown hysteresis			0.5		V
R_{ON}	On-state resistance(1)	I_{OUT} = 3 A; T_j = 25°C		35		mΩ
		I_{OUT} = 3 A; T_j = 150°C			70	
V_{clamp}	Clamp voltage	I_S = 20 mA	58	64	70	V
I_S	Supply current	Off-state; V_{CC} = 24 V; T_j = 25°C; V_{IN} = V_{OUT} = V_{SENSE} = 0 V		2(2)	5(2)	µA
		On-state; V_{CC} = 24 V; V_{IN} = 5 V; I_{OUT} = 0 A		4.2	6	mA
$I_{L(off)}$	Off-state output current	V_{IN} = V_{OUT} = 0 V; V_{CC} = 24 V; T_j = 25°C	0	0.01	3	µA
		V_{IN} = V_{OUT} = 0 V; V_{CC} = 24 V; T_j = 125°C	0		5	
V_F	Output - V_{CC} diode voltage	-I_{OUT} = 3 A; T_j = 150°C			0.7	V

1. For each channel
2. PowerMOS leakage included

Table 6. Switching (V_{CC} = 24 V; T_j = 25 °C)

Symbol	Parameter	Test conditions	Min.	Typ.	Max.	Unit
$t_{d(on)}$	Turn-on delay time	R_L = 8 Ω		46		µs
$t_{d(off)}$	Turn-off delay time	R_L = 8 Ω		54		µs
$dV_{OUT}/dt_{(on)}$	Turn-on voltage slope	R_L = 8 Ω	0.55			V/µs
$dV_{OUT}/dt_{(off)}$	Turn-off voltage slope	R_L = 8 Ω	0.46			V/µs
W_{ON}	Switching energy losses during t_{won}	R_L = 8 Ω		1		mJ
W_{OFF}	Switching energy losses during t_{woff}	R_L = 8 Ω		0.65		mJ

Table 7. Logic inputs

Symbol	Parameter	Test conditions	Min.	Typ.	Max.	Unit
V_{IL}	Input low level voltage				0.9	V
I_{IL}	Low level input current	V_{IN} = 0.9 V	1			µA
V_{IH}	Input high level voltage		2.1			V
I_{IH}	High level input current	V_{IN} = 2.1 V			10	µA
$V_{I(hyst)}$	Input hysteresis voltage		0.25			V
V_{ICL}	Input clamp voltage	I_{IN} = 1 mA	5.5		7	V
		I_{IN} = -1 mA		-0.7		V
$V_{FR_Stby_L}$	Fault_reset_standby low level voltage				0.9	V
$I_{FR_Stby_L}$	Low level fault_reset_standby current	V_{FR_Stby} = 0.9 V	1			µA
$V_{FR_Stby_H}$	Fault_reset_standby high level voltage		2.1			V
$I_{FR_Stby_H}$	High level fault_reset_standby current	V_{FR_Stby} = 2.1 V			10	µA
V_{FR_Stby} (hyst)	Fault_reset_standby hysteresis voltage		0.25			V
$V_{FR_Stby_CL}$	Fault_reset_standby clamp voltage	I_{FR_Stby} = 15 mA (10 ms)	11		15	V
		I_{FR_Stby} = -1 mA		-0.7		V
t_{reset}	Overload latch-off reset time	See *Figure 4*	2		24	µs
t_{stby}	Standby delay	See *Figure 5*	120		1200	µs

Figure 4. Treset definition

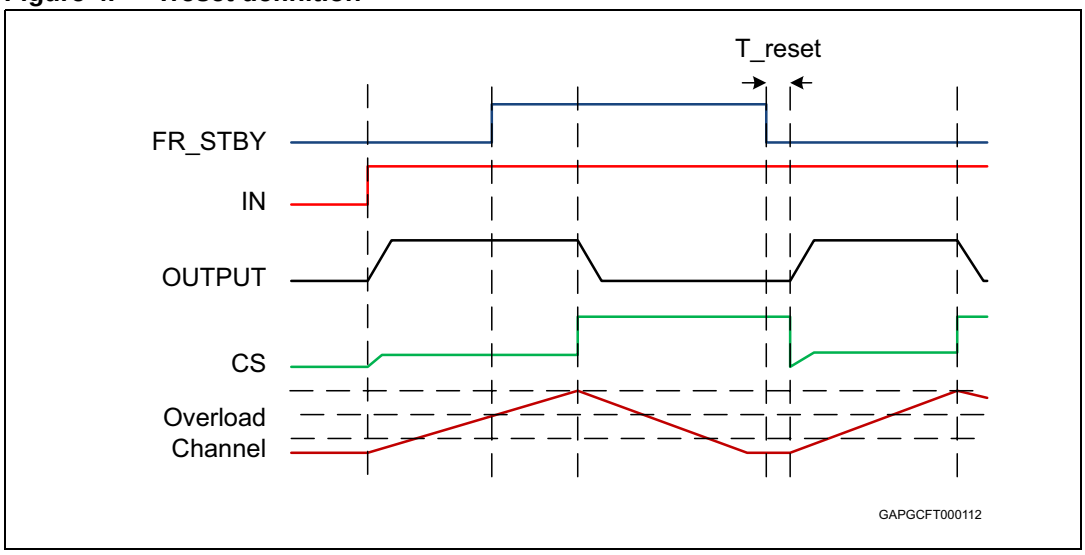

Figure 5. Tstby definition

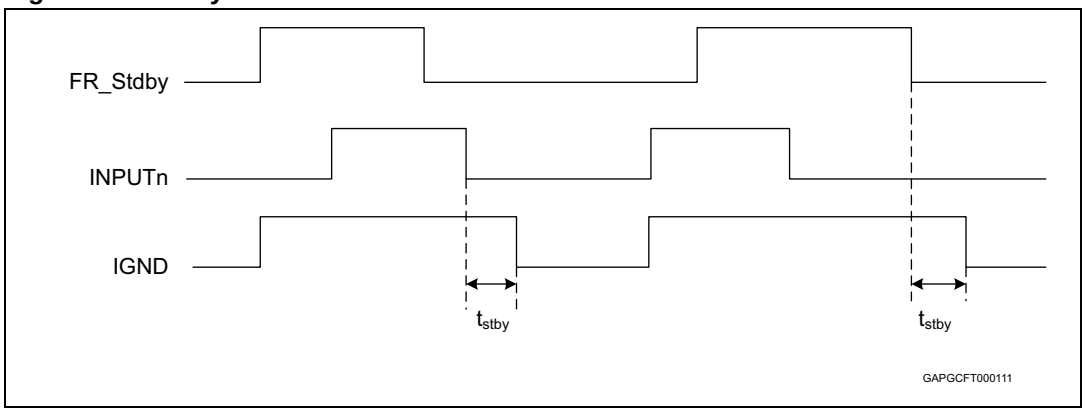

Table 8. Protections and diagnostics

Symbol	Parameter	Test conditions	Min.	Typ.	Max.	Unit
I_{limH}	DC short circuit current	V_{CC} = 24V	30	42	55	A
		5 V < V_{CC} < 36 V			55	A
I_{limL}	Short circuit current during thermal cycling	V_{CC} = 24 V; T_R < T_j < T_{TSD}		10.5		A
T_{TSD}	Shutdown temperature		150	175	200	°C
T_R	Reset temperature		T_{RS} + 1	T_{RS} + 5		°C
T_{RS}	Thermal reset of status		135			°C
T_{HYST}	Thermal hysteresis (T_{TSD}-T_R)			7		°C
V_{DEMAG}	Turn-off output voltage clamp	I_{OUT} = 3 A; V_{IN} = 0; L = 6 mH	V_{CC} - 58	V_{CC} - 64	V_{CC} - 70	V
V_{ON}	Output voltage drop limitation	I_{OUT} = 150 mA; T_j = -40°C to 150°C		25		mV

Table 9. Current sense (8 V < V_{CC} < 36 V)

Symbol	Parameter	Test conditions	Min.	Typ.	Max.	Unit
K_{OL}	I_{OUT}/I_{SENSE}	I_{OUT} = 12 mA; V_{SENSE} = 0.5 V; T_j = -40°C to 150°C	820			
		I_{OUT} = 12 mA; V_{SENSE} = 0.5 V; T_j = 25°C to 150°C	1357			
K_{LED}	I_{OUT}/I_{SENSE}	I_{OUT} = 60 mA; V_{SENSE} = 0.5 V; T_j = -40°C to 150°C	1690	4160	7210	
		I_{OUT} = 60 mA; V_{SENSE} = 0.5 V; T_j = 25°C to 150°C	2040		6460	
dK_{LED}/K_{LEDTOT}(1)	Current sense ratio drift	I_{OUT} = 12 mA to 60 mA; I_{CAL} = 35 mA; V_{SENSE} = 0.5 V; T_j = -40°C to 150°C	-40		40	%
K_0	I_{OUT}/I_{SENSE}	I_{OUT} = 100 mA; V_{SENSE} = 0.5 V; T_j = -40°C to 150°C	2215	4030	6305	
dK_0/K_0(1)	Current sense ratio drift	I_{OUT} = 100 mA; V_{SENSE} = 0.5 V; T_j = -40°C to 150°C	-20		20	%
K_1	I_{OUT}/I_{SENSE}	I_{OUT} = 0.8 A; V_{SENSE} = 1 V; T_j = -40°C to 150°C	2210	3400	4590	
dK_1/K_1(1)	Current sense ratio drift	I_{OUT} = 0.8 A; V_{SENSE} = 1 V; T_j = -40°C to 150°C	-18		18	%
K_2	I_{OUT}/I_{SENSE}	I_{OUT} = 1.6 A; V_{SENSE} = 2 V; T_j = -40°C to 150°C	2541	3385	4059	
dK_2/K_2(1)	Current sense ratio drift	I_{OUT} = 1.6 A; V_{SENSE} = 2 V; T_j = -40°C to 150°C	-14		14	%
K_3	I_{OUT}/I_{SENSE}	I_{OUT} = 2.4 A; V_{SENSE} = 4 V; T_j = -40°C to 150°C	2706	3360	3894	
dK_3/K_3(1)	Current sense ratio drift	I_{OUT} = 2.4 A; V_{SENSE} = 4 V; T_j = -40°C to 150°C	-10		10	%
K_4	I_{OUT}/I_{SENSE}	I_{OUT} = 12 A; V_{SENSE} = 4 V; T_j = -40°C to 150°C	3055	3313	3445	
dK_4/K_4(1)	Current sense ratio drift	I_{OUT} = 12 A; V_{SENSE} = 4 V; T_j = -40°C to 150°C	-4		4	%
$dK_{BULB}/K_{BULBTOT}$(1)	Current sense ratio drift	I_{OUT} = 1.3 A to 3.2 A; I_{OUTCAL} = 2.2 A; V_{SENSE} = 2 V; T_j = -40°C to 150°C	-18		18	%
I_{SENSE0}	Analog sense leakage current	I_{OUT} = 0 A; V_{SENSE} = 0 V; V_{IN} = 0 V; T_j = -40°C to 150°C	0		1	µA
		I_{OUT} = 0 A; V_{SENSE} = 0 V; V_{IN} = 5 V; T_j = -40°C to 150°C	0		2	µA
V_{SENSE}	Max analog sense output voltage	I_{OUT} = 12 A; R_{SENSE} = 3.9 KΩ	5			V
V_{SENSEH}	Analog sense output voltage in fault condition(2)	V_{CC} = 24 V; R_{SENSE} = 3.9 KΩ	7.5	8.5	9.5	V

Table 9. Current sense (8 V < V_{CC} < 36 V) (continued)

Symbol	Parameter	Test conditions	Min.	Typ.	Max.	Unit
I_{SENSEH}	Analog sense output current in fault condition (2)	V_{CC} = 24 V; V_{SENSE} = 5 V	4.9	9	12	mA
$t_{DSENSE2H}$	Delay response time from rising edge of INPUT pin	V_{SENSE} < 4 V; 0.2 A < I_{OUT} < 12 A; I_{SENSE} = 90 % of $I_{SENSE\ max}$; (see *Figure 6*)		200	400	µs
$\Delta t_{DSENSE2H}$	Delay response time between rising edge of output current and rising edge of current sense	V_{SENSE} < 4 V; I_{SENSE} = 90 % of $I_{SENSEMAX}$; I_{OUT} = 90 % of I_{OUTMAX}; I_{OUTMAX} = 3 A (see *Figure 10*)			250	µs
$t_{DSENSE2L}$	Delay response time from falling edge of INPUT pin	V_{SENSE} < 4 V; 0.2 A < I_{OUT} < 12 A; I_{SENSE} = 10 % of $I_{SENSE\ max}$; (see *Figure 6*)		5	20	µs

1. Parameter guaranteed by design; it is not tested.
2. Fault condition includes: power limitation, overtemperature and open load in off-state condition.

Table 10. Open-load detection (V_{FR_Stby} = 5 V)

Symbol	Parameter	Test conditions	Min.	Typ.	Max.	Unit
V_{OL}	Open-load off-state voltage detection threshold	V_{IN} = 0 V; 8 V < V_{CC} < 36 V	2		4	V
t_{DSTKON}	Output short circuit to V_{CC} detection delay at turn off	See *Figure 7*	180		1800	µs
$I_{L(off2)}$	Off-state output current at V_{OUT} = 4V	V_{IN} = 0 V; V_{SENSE} = 0 V; V_{OUT} rising from 0 V to 4 V	-120		0	µA
td_vol	Delay response from output rising edge to V_{SENSE} rising edge in open-load	V_{OUT} = 4 V; V_{IN} = 0 V; V_{SENSE} = 90 % of V_{SENSEH}; R_{SENSE} = 3.9 K			20	µs
t_{DFRSTK_ON}	Output short circuit to V_{CC} detection delay at FRSTBY activation	See *Figure 9*; $Input_{1,2}$ = low			50	µs

Figure 6. Current sense delay characteristics

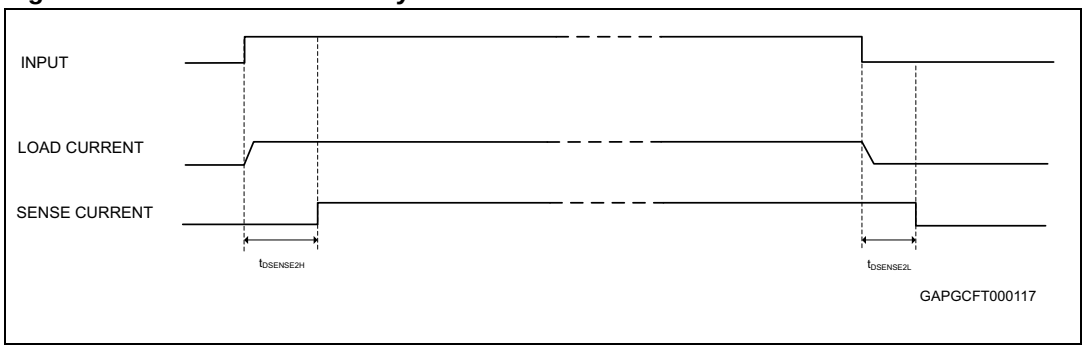

Figure 7. Open-load off-state delay timing

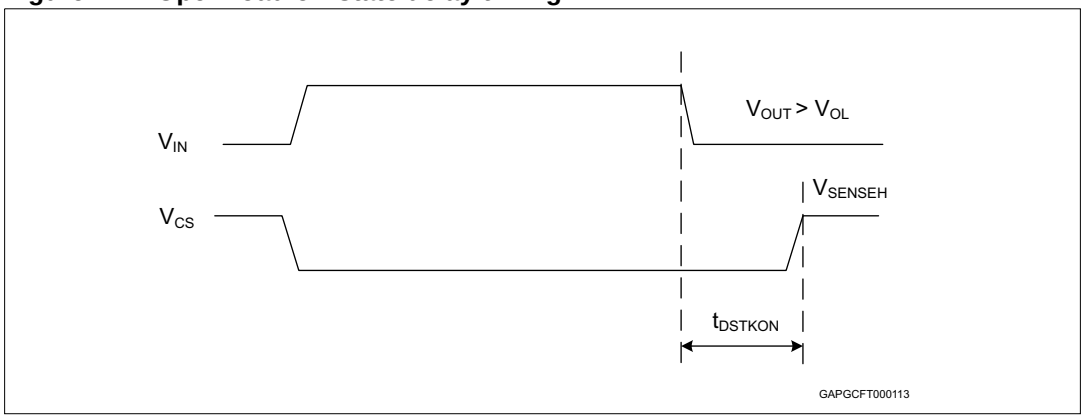

Note: Vfr_stby = high

Figure 8. Switching characteristics

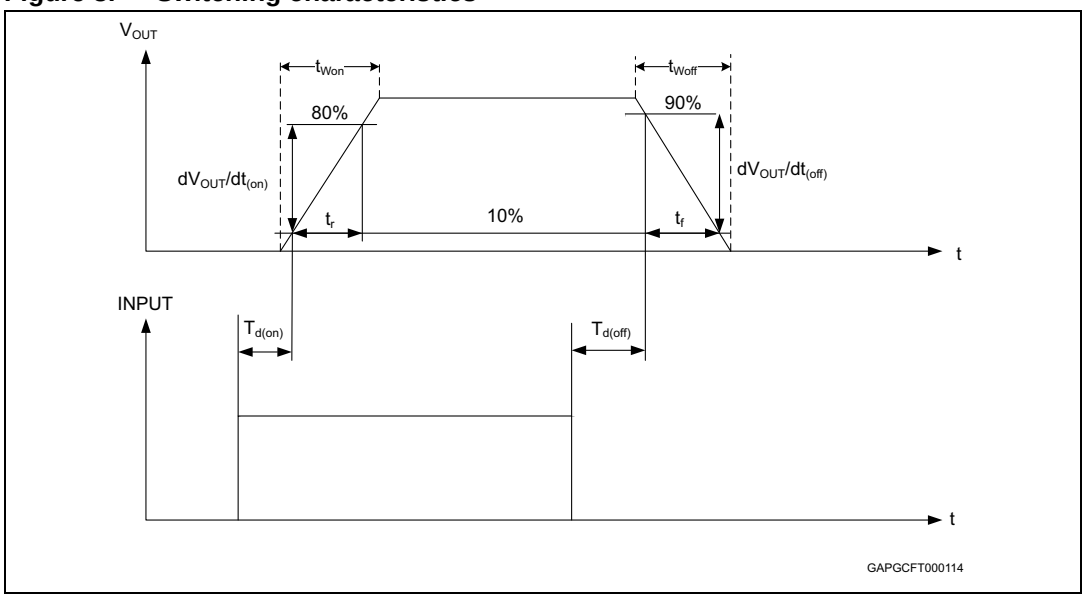

Figure 9. Output stuck to V_{CC} detection delay time at FR_{STBY} activation

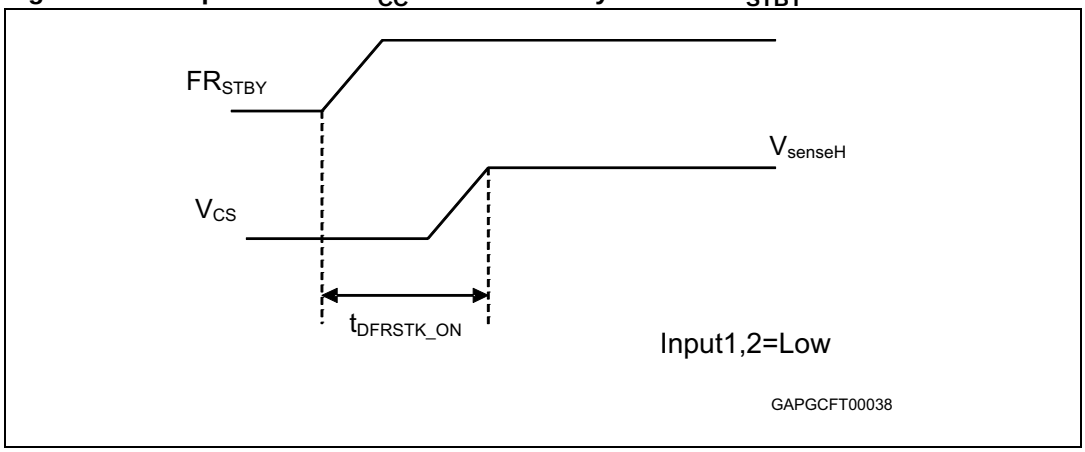

Figure 10. Delay response time between rising edge of output current and rising edge of current sense

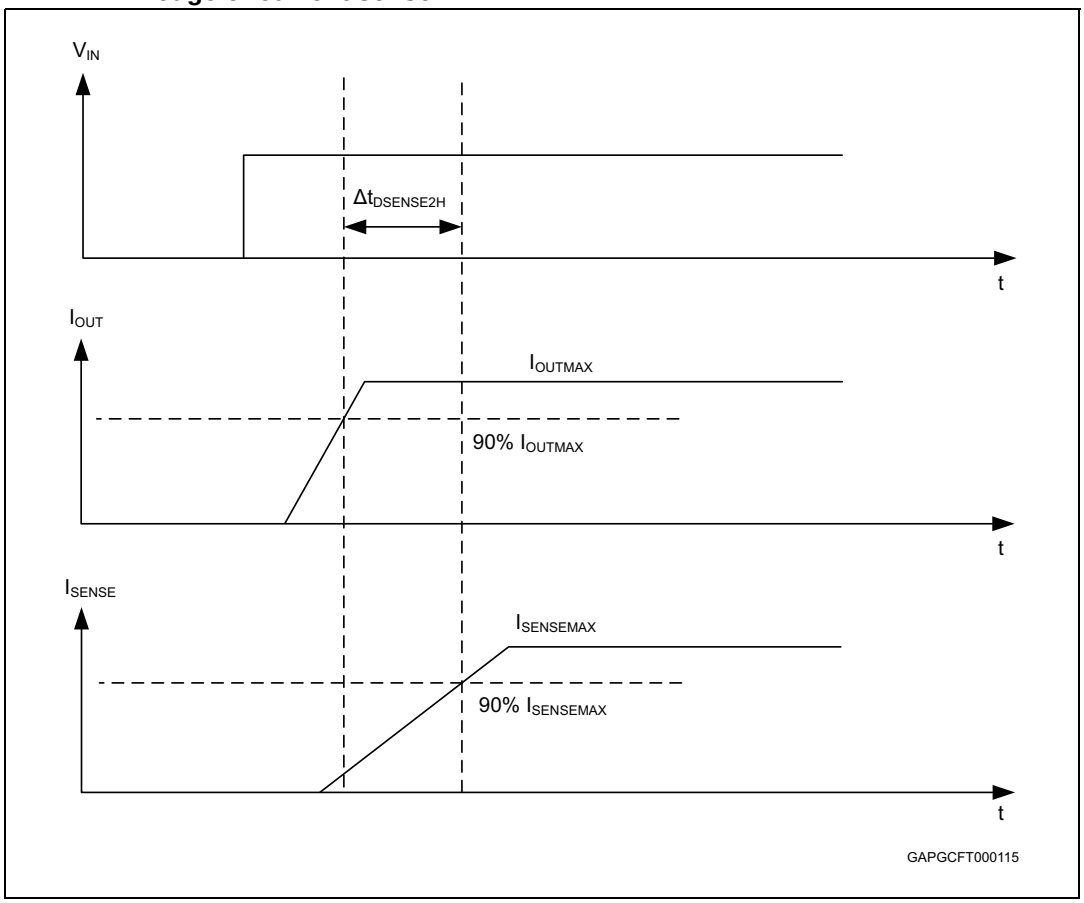

Figure 11. Output voltage drop limitation

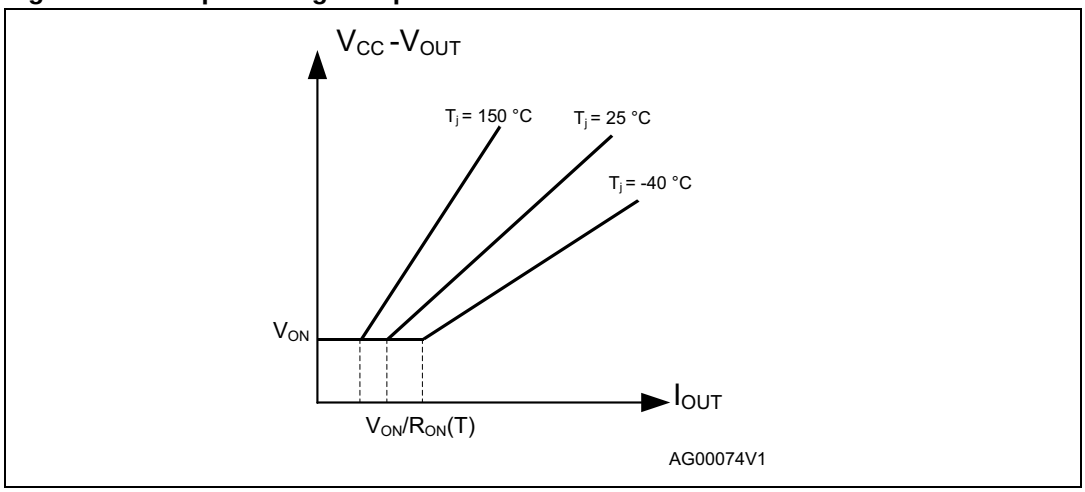

Figure 12. Device behavior in overload condition

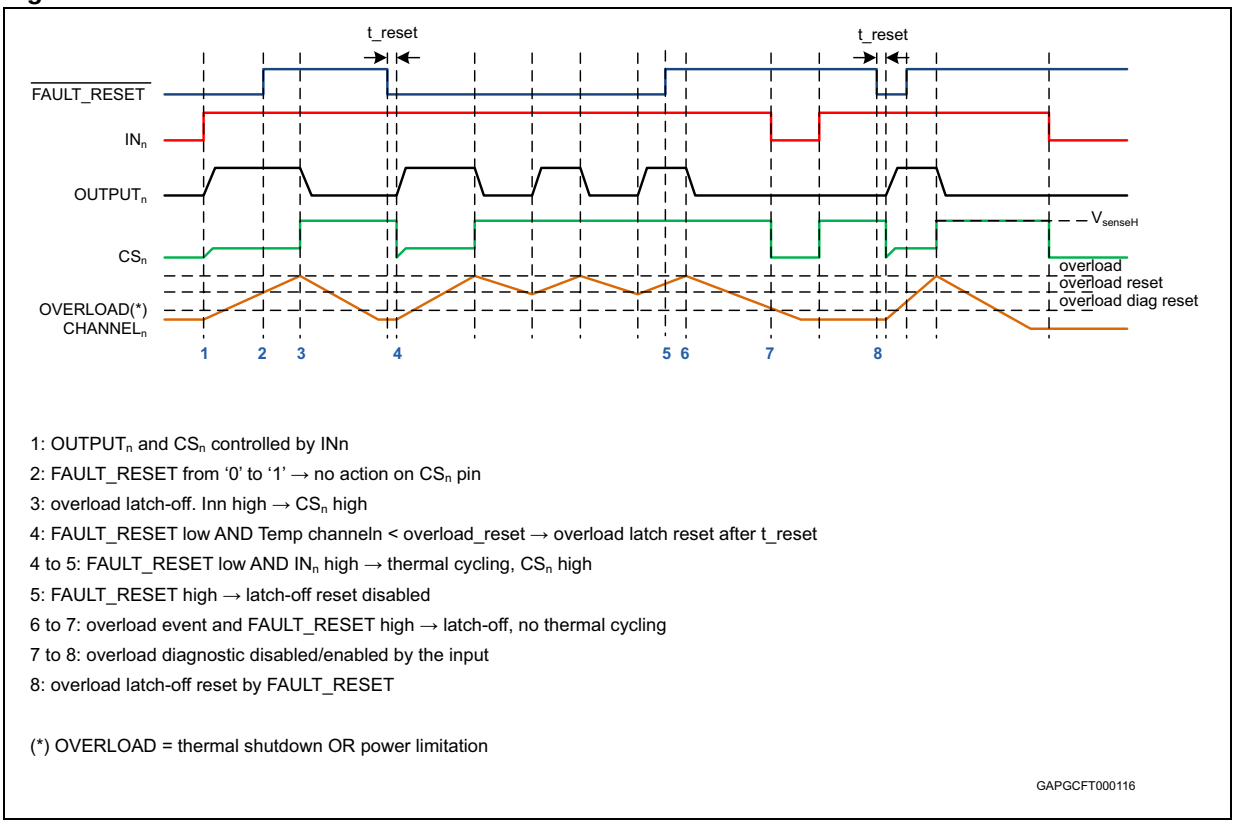

Table 11. Truth table

Conditions	Fault reset standby	Input	Output	Sense
Standby	L	L	L	0
Normal operation	X X	L H	L H	0 Nominal
Overload	X X	L H	L H	0 > Nominal
Overtemperature / short to ground	X L H	L H H	L Cycling Latched	0 V_{SENSEH} V_{SENSEH}
Undervoltage	X	X	L	0
Short to V_{BAT}	L H X	L L H	H H H	0 V_{SENSEH} < Nominal
Open load off-state (with pull-up)	L H X	L L H	H H H	0 V_{SENSEH} 0
Negative output voltage clamp	X	L	Negative	0

Table 12. Electrical transient requirements (part 1)

ISO 7637-2: 2004(E) Test pulse	Test levels (1)		Number of pulses or test times	Burst cycle/pulse repetition time		Delays and impedance
	III	IV				
1	- 450 V	- 600 V	5000 pulses	0.5 s	5 s	1 ms, 50 Ω
2a	+ 37 V	+ 50 V	5000 pulses	0.2 s	5 s	50 µs, 2 Ω
3a	- 150 V	- 200 V	1h	90 ms	100 ms	0.1 µs, 50 Ω
3b	+ 150 V	+ 200 V	1h	90 ms	100 ms	0.1 µs, 50 Ω
4	- 12 V	- 16 V	1 pulse			100 ms, 0.01 Ω
5b(1)	+ 123 V	+ 174 V	1 pulse			350 ms, 1 Ω

1. Valid in case of external load dump clamp: 58 V maximum referred to ground.

Table 13. Electrical transient requirements (part 2)(1)

ISO 7637-2: 2004(E) Test pulse	Test level results	
	III	IV
1	C	C
2a	C	C
3a	C	C
3b(2)	E	E
3b(3)	C	C
4	C	C
5b (4)	C	C

1. In order to guarantee the ISO transient classes a minimum 10KΩ protection resistors are needed on logic pins
2. Without capacitor between V_{CC} and GND.
3. With 10 nF between V_{CC} and GND.
4. External load dump clamp, 58 V maximum, referred to ground.

Table 14. Electrical transient requirements (part 3)

Class	Contents
C	All functions of the device are performed as designed after exposure to disturbance.
E	One or more functions of the device are not performed as designed after exposure to disturbance and cannot be returned to proper operation without replacing the device.

2.4 Electrical characteristics curves

Figure 13. Off-state output current

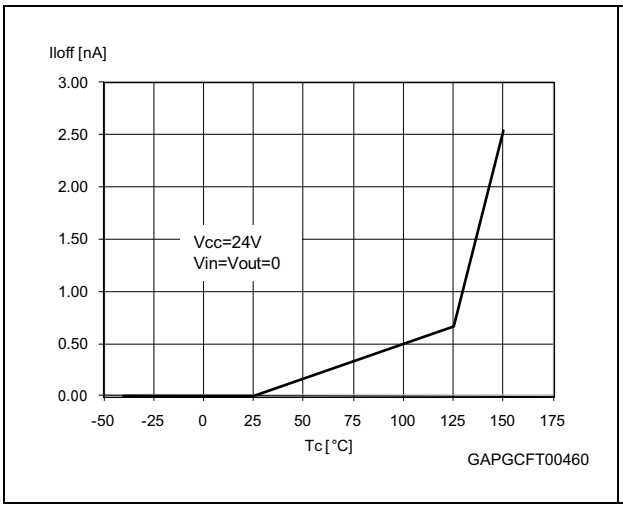

Figure 14. High-level input current

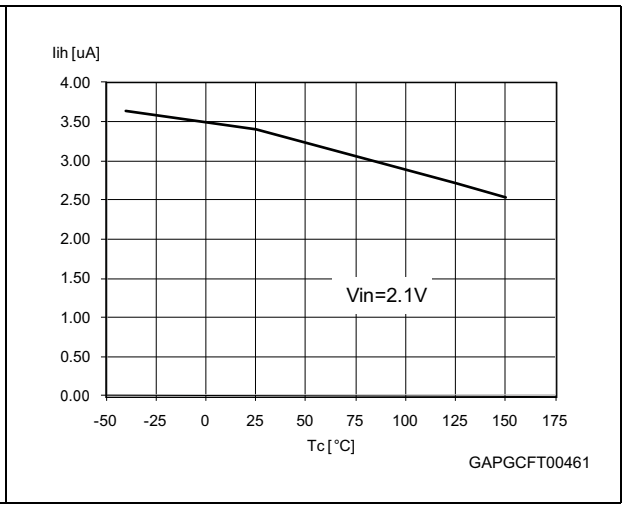

Figure 15. Input clamp voltage

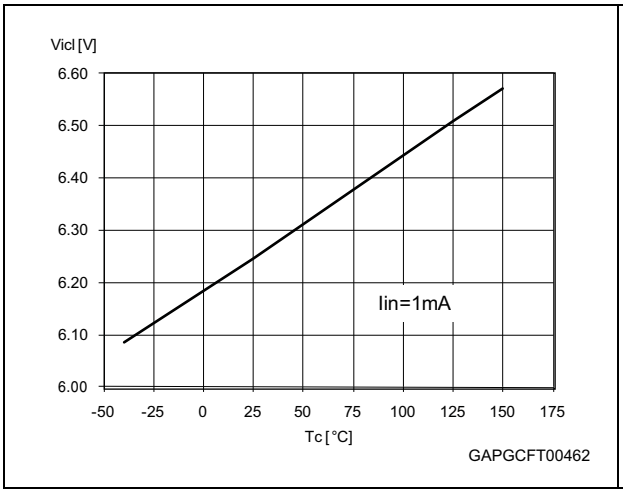

Figure 16. High-level input voltage

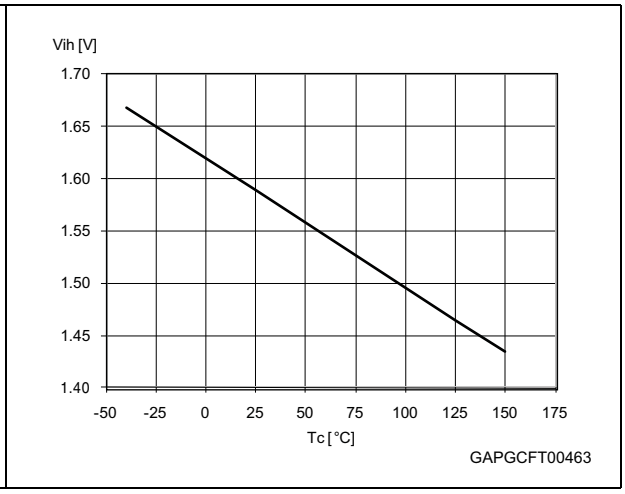

Figure 17. Low-level input voltage

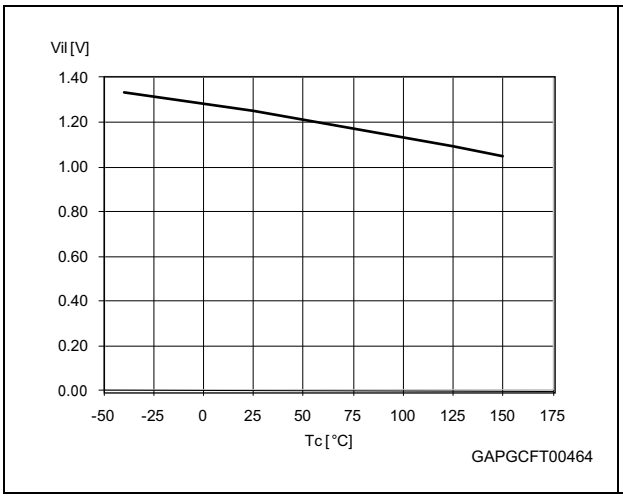

Figure 18. Input hysteresis voltage

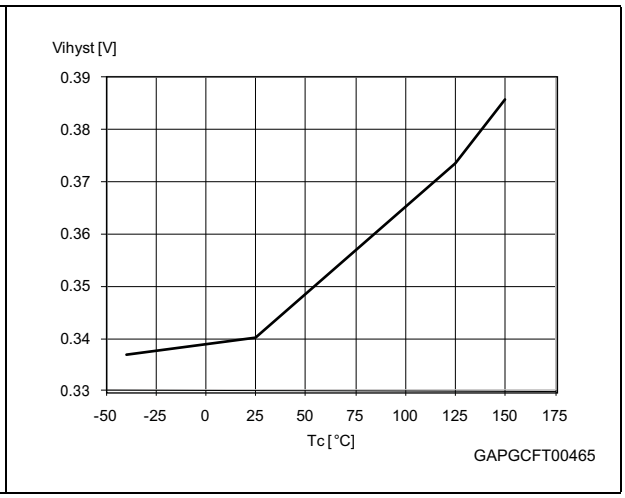

Figure 19. On-state resistance vs T_{case}

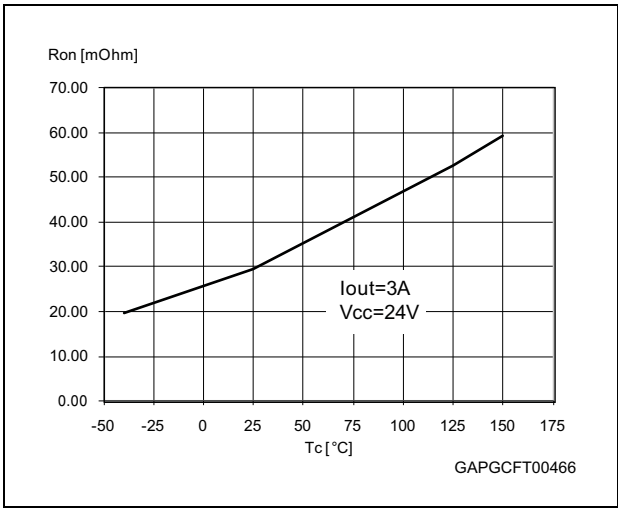

Figure 20. On-state resistance vs V_{CC}

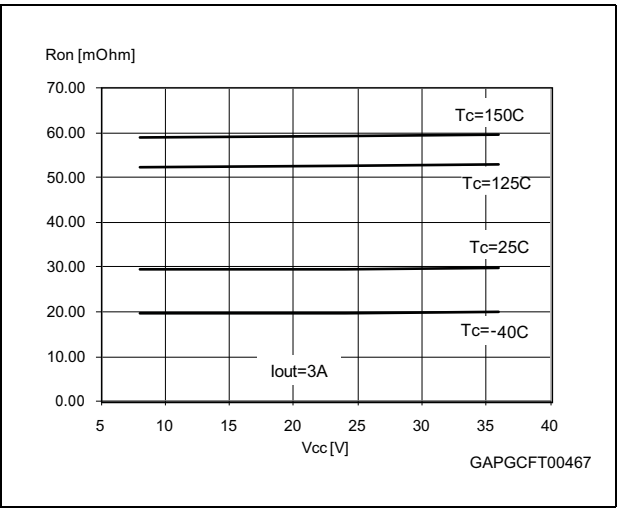

Figure 21. I_{LIMH} vs T_{case}

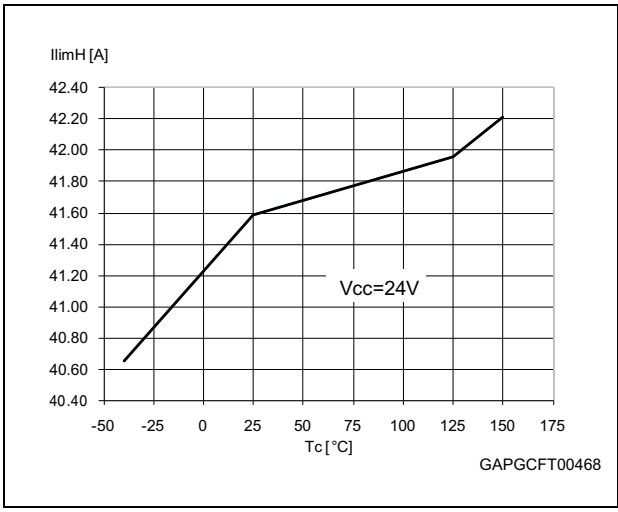

Figure 22. Turn-on voltage slope

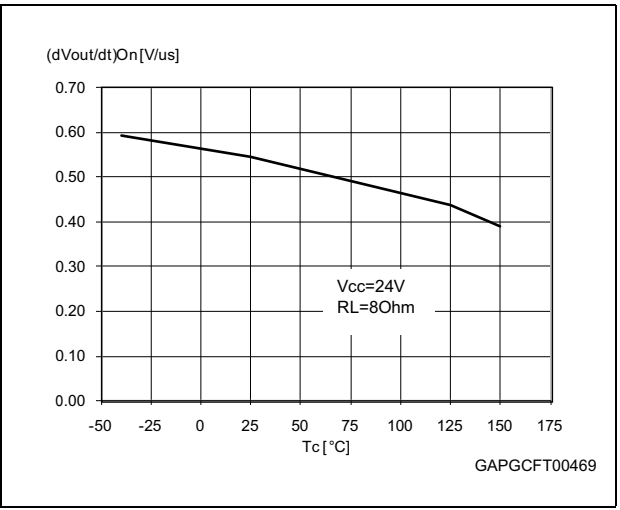

Figure 23. Turn-off voltage slope

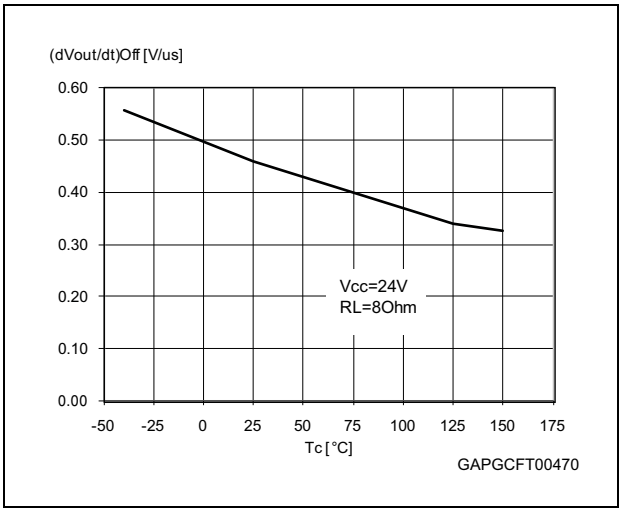

3 Application information

Figure 24. Application schematic

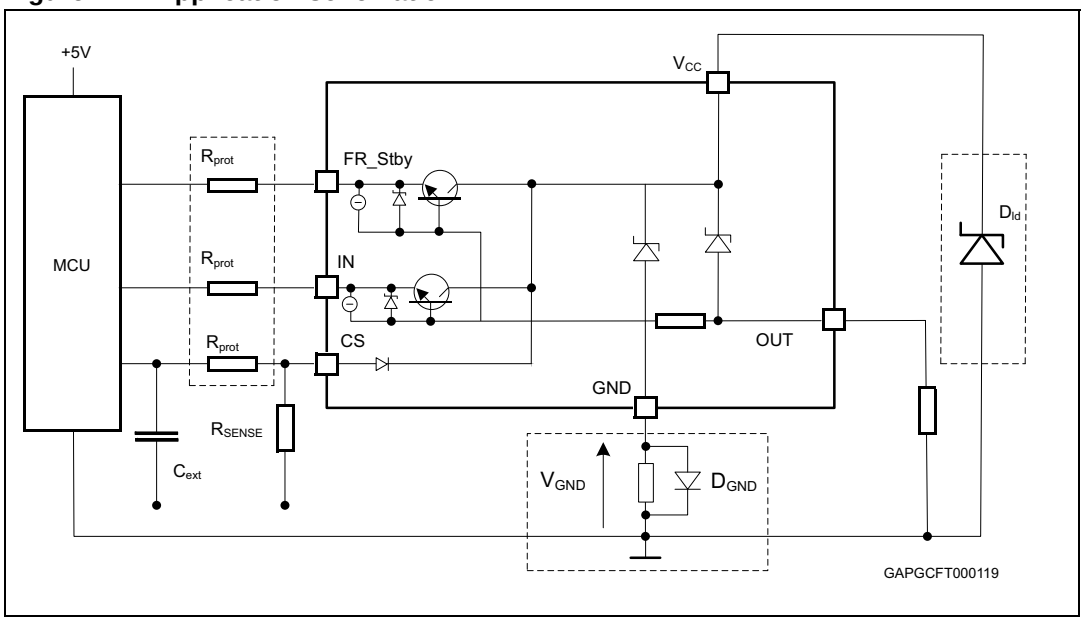

3.1 GND protection network against reverse battery

3.1.1 Solution 1: resistor in the ground line (R_{GND} only)

This solution can be used with any type of load.

The following is an indication on how to dimension the R_{GND} resistor.

1. $R_{GND} \leq 600\ mV / (I_{S(on)max})$
2. $R_{GND} \geq (-V_{CC}) / (-I_{GND})$

where $-I_{GND}$ is the DC reverse ground pin current and can be found in the absolute maximum rating section of the device datasheet.

Power dissipation in R_{GND} (when $V_{CC} < 0$: during reverse battery situations) is:

$P_D = (-V_{CC})^2 / R_{GND}$

This resistor can be shared amongst several different HSDs. Please note that the value of this resistor should be calculated with formula (1) where $I_{S(on)max}$ becomes the sum of the maximum on-state currents of the different devices.

Please note that if the microprocessor ground is not shared by the device ground then the R_{GND} produces a shift ($I_{S(on)max} * R_{GND}$) in the input thresholds and the status output values. This shift varies depending on how many devices are ON in case of several high side drivers sharing the same R_{GND}.

If the calculated power dissipation leads to a large resistor or several devices have to share the same resistor then ST suggests Solution 2 is used (see below).

3.1.2 Solution 2: diode (D_{GND}) in the ground line

A resistor (R_{GND} = 4.7 kΩ) should be inserted in parallel to D_{GND} if the device drives an inductive load.

This small signal diode can be safely shared amongst several different HSDs. Also in this case, the presence of the ground network produces a shift (≈600 mV) in the input threshold and in the status output values, if the microprocessor ground is not common to the device ground. This shift does not vary if more than one HSD shares the same diode/resistor network.

3.2 Load dump protection

D_{ld} is necessary (Voltage Transient Suppressor) if the load dump peak voltage exceeds to V_{CC} maximum DC rating. The same applies if the device is subject to transients on the V_{CC} line that are greater than the ones shown in the ISO T/R 7637/2 table.

3.3 MCU I/Os protection

If a ground protection network is used and negative transient is present on the V_{CC} line, the control pins are pulled negative. ST suggests that a resistor (R_{prot}) have to be inserted in line to prevent the microcontroller I/O pins from latching-up.

The value of these resistors is a compromise between the leakage current of the microcontroller and the current required by the HSD I/Os (Input levels compatibility) with the latch-up limit of microcontroller I/Os.

$-V_{CCpeak}/I_{latchup} \leq R_{prot} \leq (V_{OH\mu C}-V_{IH}-V_{GND}) / I_{IHmax}$

Calculation example:

For V_{CCpeak}= -600 V and $I_{latchup} \geq$ 20 mA; $V_{OH\mu C} \geq$ 4.5 V

30 kΩ ≤ R_{prot} ≤ 180 kΩ.

Recommended R_{prot} value is 60 kΩ.

3.4 Maximum demagnetization energy (V_{CC} = 24 V)

Figure 25. Maximum turn-off current versus inductance

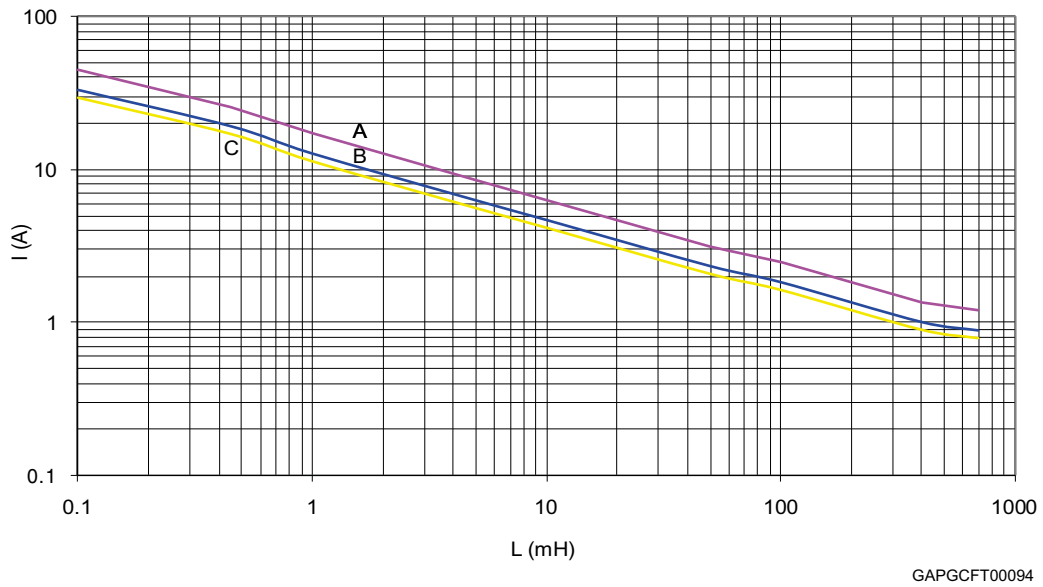

A: T_{jstart} = 150°C single pulse

B: T_{jstart} = 100°C repetitive pulse

C: T_{jstart} = 125°C repetitive pulse

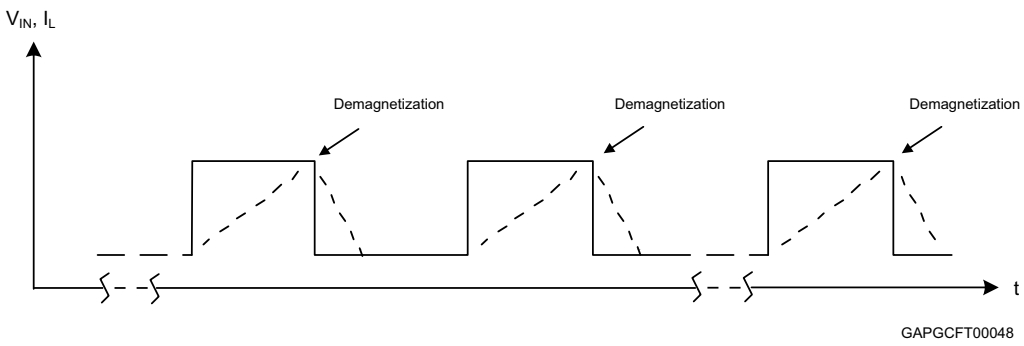

Note: Values are generated with R_L = 0 Ω In case of repetitive pulses, T_{jstart} (at the beginning of each demagnetization) of every pulse must not exceed the temperature specified above for curves A and B.

4 Package and PCB thermal data

4.1 PowerSSO-24 thermal data

Figure 26. PowerSSO-24 PC board

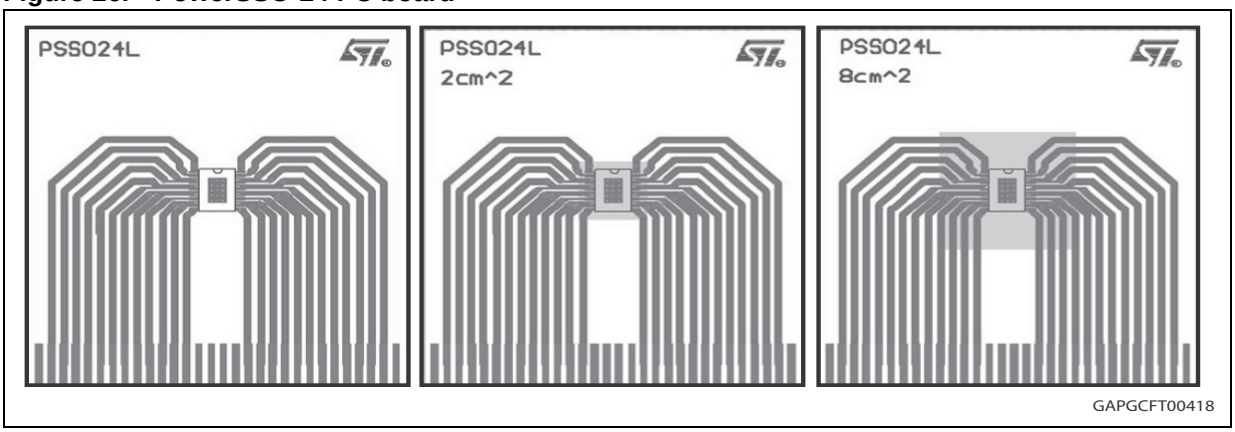

1. Layout condition of R_{th} and Z_{th} measurements (PCB: double layer, thermal vias, FR4 area = 77 mm x 86 mm, PCB thickness = 1.6 mm, Cu thickness = 70 µm (front and back side), Copper areas: from minimum pad lay-out to 8 cm^2).

Figure 27. $R_{thj\text{-}amb}$ vs PCB copper area in open box free air condition (one channel ON)

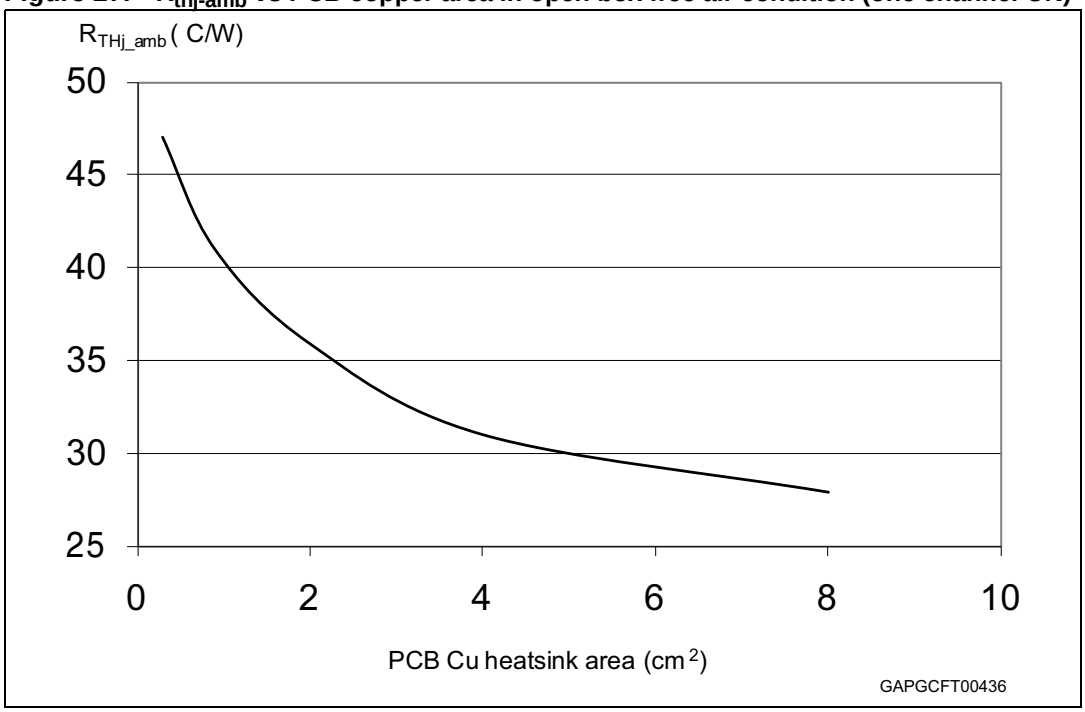

Figure 28. PowerSSO-24 thermal impedance junction ambient single pulse (one channel ON)

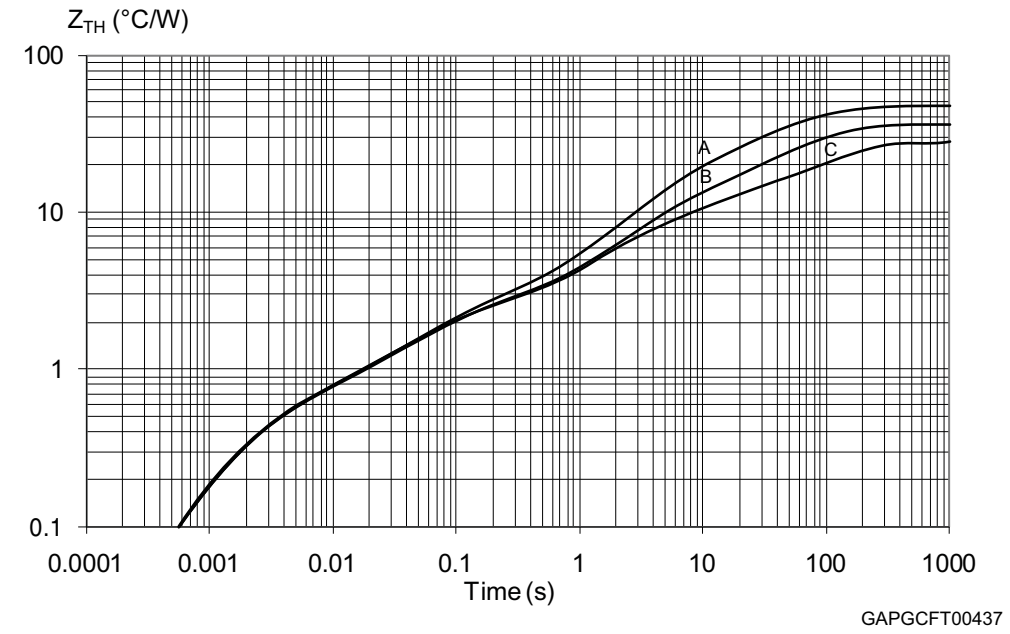

A: Cu = Footprint **B**: Cu = 2 cm^2 **C**: Cu = 8 cm^2

Figure 29. Thermal fitting model of a double channel HSD in PowerSSO-24(1)

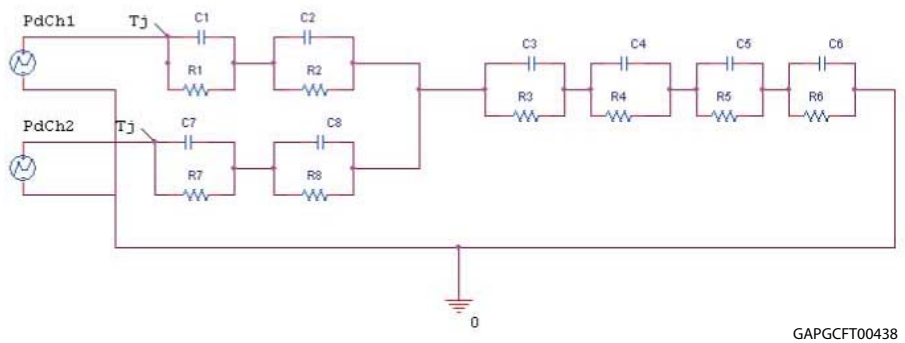

1. The fitting model is a simplified thermal tool and is valid for transient evolutions where the embedded protections (power limitation or thermal cycling during thermal shutdown) are not triggered

Equation 1: Pulse calculation formula

$$Z_{TH\delta} = R_{TH} \cdot \delta + Z_{THtp}(1 - \delta)$$

where $\delta = t_P/T$

Table 15. Thermal parameters

Area/island (cm^2)	Footprint	2	8
R1 (°C/W)	0,5	—	—
R2 (°C/W)	0.75	—	—
R3 (°C/W)	1	—	—
R4 (°C/W)	7.7	—	—
R5 (°C/W)	9	9	8
R6 (°C/W)	28	17	10
R7 (°C/W)	0,5	—	—
R8 (°C/W)	0.75	—	—
C1 (W.s/°C)	0,005	—	—
C2 (W.s/°C)	0,05	—	—
C3 (W.s/°C)	0,1	—	—
C4 (W.s/°C)	0,5	—	—
C5 (W.s/°C)	1	4	9
C6 (W.s/°C)	2.2	5	17
C7 (W.s/°C)	0,005	—	—
C8 (W.s/°C)	0,05	—	—

5 Package and packing information

5.1 ECOPACK®

In order to meet environmental requirements, ST offers these devices in different grades of ECOPACK® packages, depending on their level of environmental compliance. ECOPACK® specifications, grade definitions and product status are available at: www.st.com. ECOPACK® is an ST trademark.

5.2 PowerSSO-24 package information

Figure 30. PowerSSO-24 package dimensions

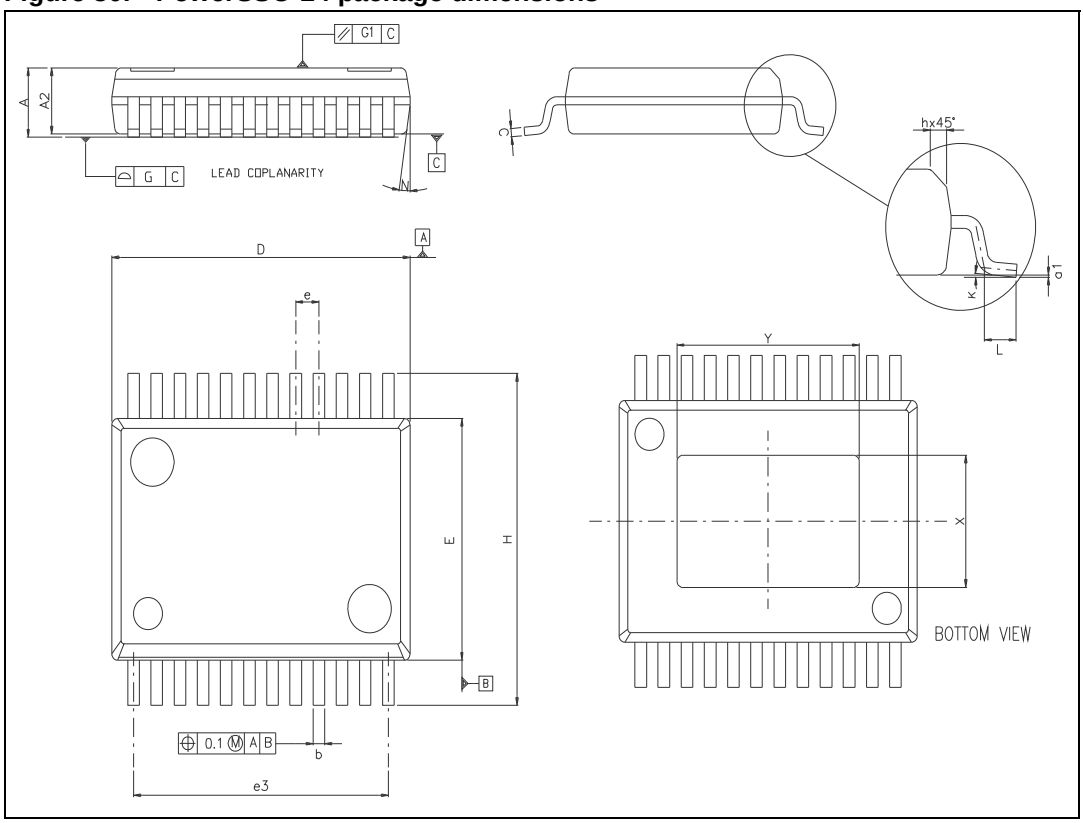

Table 16. PowerSSO-24 mechanical data

Symbol	Millimeters		
	Min.	Typ.	Max.
A	2.15		2.47
A2	2.15		2.40
a1	0		0.075
b	0.33		0.51
c	0.23		0.32
D	10.10		10.50
E	7.4		7.6
e		0.8	
e3		8.8	
G			0.1
G1			0.06
H	10.1		10.5
h			0.4
k		5°	
L	0.55		0.85
N			10º
X	4.1		4.7
Y	6.5		7.1

5.3 PowerSSO-24 packing information

Figure 31. PowerSSO-24 tube shipment (no suffix)

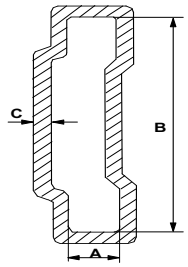

GAPGCFT00002

Base Q.ty	49
Bulk Q.ty	1225
Tube length (± 0.5)	532
A	3.5
B	13.8
C (± 0.1)	0.6

All dimensions are in mm.

Figure 32. PowerSSO-24 tape and reel shipment (suffix "TR")

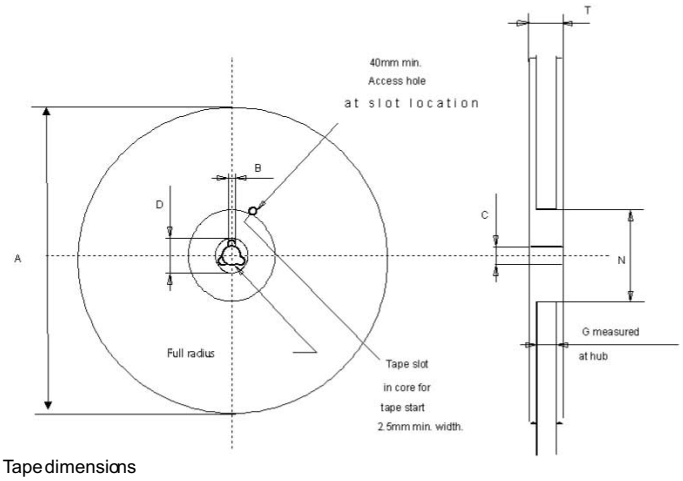

Reel dimensions

Base Q.ty	1000
Bulk Q.ty	1000
A (max)	330
B (min)	1.5
C (± 0.2)	13
F	20.2
G (+ 2 / -0)	24.4
N (min)	100
T (max)	30.4

Tape dimensions
According to Electronic Industries Association
(EIA) Standard 481 rev. A, Feb 1986

Tape width	W	24
Tape Hole Spacing	P0 (± 0.1)	4
Component Spacing	P	12
Hole Diameter	D (± 0.05)	1.55
Hole Diameter	D1 (min)	1.5
Hole Position	F (± 0.1)	11.5
Compartment Depth	K (max)	2.85
Hole Spacing	P1 (± 0.1)	2

All dimensions are in mm.

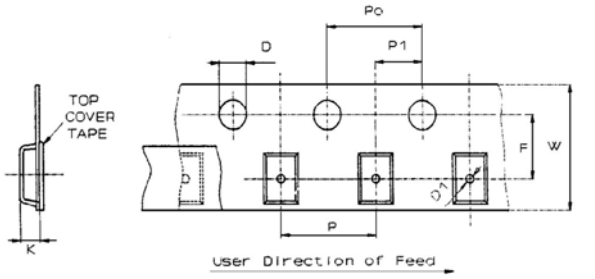

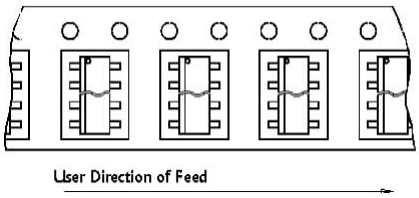

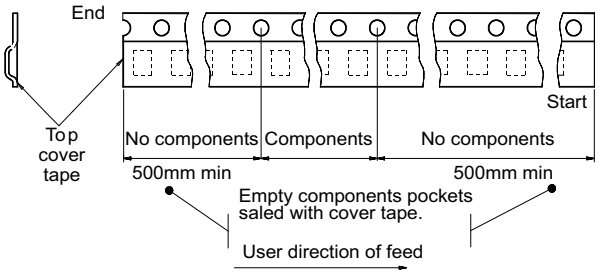

GAPGCFT00421

6 Order codes

Table 17. Device summary

Package	Order codes	
	Tube	Tape and reel
PowerSSO-24	VND5T035LAK-E	VND5T035LAKTR-E

7 Revision history

Table 18. Document revision history

Date	Revision	Changes
15-Jun-2012	1	Initial release.
19-Jun-2012	2	Changed document state form “Target specification“ to “Production data“
18-Sep-2013	3	Updated disclaimer.

Please Read Carefully:

Information in this document is provided solely in connection with ST products. STMicroelectronics NV and its subsidiaries (“ST”) reserve the right to make changes, corrections, modifications or improvements, to this document, and the products and services described herein at any time, without notice.

All ST products are sold pursuant to ST’s terms and conditions of sale.

Purchasers are solely responsible for the choice, selection and use of the ST products and services described herein, and ST assumes no liability whatsoever relating to the choice, selection or use of the ST products and services described herein.

No license, express or implied, by estoppel or otherwise, to any intellectual property rights is granted under this document. If any part of this document refers to any third party products or services it shall not be deemed a license grant by ST for the use of such third party products or services, or any intellectual property contained therein or considered as a warranty covering the use in any manner whatsoever of such third party products or services or any intellectual property contained therein.

UNLESS OTHERWISE SET FORTH IN ST’S TERMS AND CONDITIONS OF SALE ST DISCLAIMS ANY EXPRESS OR IMPLIED WARRANTY WITH RESPECT TO THE USE AND/OR SALE OF ST PRODUCTS INCLUDING WITHOUT LIMITATION IMPLIED WARRANTIES OF MERCHANTABILITY, FITNESS FOR A PARTICULAR PURPOSE (AND THEIR EQUIVALENTS UNDER THE LAWS OF ANY JURISDICTION), OR INFRINGEMENT OF ANY PATENT, COPYRIGHT OR OTHER INTELLECTUAL PROPERTY RIGHT.

ST PRODUCTS ARE NOT DESIGNED OR AUTHORIZED FOR USE IN: (A) SAFETY CRITICAL APPLICATIONS SUCH AS LIFE SUPPORTING, ACTIVE IMPLANTED DEVICES OR SYSTEMS WITH PRODUCT FUNCTIONAL SAFETY REQUIREMENTS; (B) AERONAUTIC APPLICATIONS; (C) AUTOMOTIVE APPLICATIONS OR ENVIRONMENTS, AND/OR (D) AEROSPACE APPLICATIONS OR ENVIRONMENTS. WHERE ST PRODUCTS ARE NOT DESIGNED FOR SUCH USE, THE PURCHASER SHALL USE PRODUCTS AT PURCHASER’S SOLE RISK, EVEN IF ST HAS BEEN INFORMED IN WRITING OF SUCH USAGE, UNLESS A PRODUCT IS EXPRESSLY DESIGNATED BY ST AS BEING INTENDED FOR “AUTOMOTIVE, AUTOMOTIVE SAFETY OR MEDICAL” INDUSTRY DOMAINS ACCORDING TO ST PRODUCT DESIGN SPECIFICATIONS. PRODUCTS FORMALLY ESCC, QML OR JAN QUALIFIED ARE DEEMED SUITABLE FOR USE IN AEROSPACE BY THE CORRESPONDING GOVERNMENTAL AGENCY.

Resale of ST products with provisions different from the statements and/or technical features set forth in this document shall immediately void any warranty granted by ST for the ST product or service described herein and shall not create or extend in any manner whatsoever, any liability of ST.

ST and the ST logo are trademarks or registered trademarks of ST in various countries.
Information in this document supersedes and replaces all information previously supplied.
The ST logo is a registered trademark of STMicroelectronics. All other names are the property of their respective owners.

© 2013 STMicroelectronics - All rights reserved

STMicroelectronics group of companies

Australia - Belgium - Brazil - Canada - China - Czech Republic - Finland - France - Germany - Hong Kong - India - Israel - Italy - Japan - Malaysia - Malta - Morocco - Philippines - Singapore - Spain - Sweden - Switzerland - United Kingdom - United States of America

www.st.com

Mouser Electronics

Authorized Distributor

Click to View Pricing, Inventory, Delivery & Lifecycle Information:

STMicroelectronics:

VND5T035LAK-E VND5T035LAKTR-E