CX-Series

HYDRAULIC-MAGNETIC CIRCUIT BREAKER

The CX-Series circuit breaker features a unique and innovative arc-quenching configuration that allows the breaker to safely handle high amperage and high DC voltage applications in a compact package. By using a patent pending magnetic flux boosting terminal configuration, a strong magnetic field is created thus motivating the arc into an enhanced arc chamber improving the breaker's overall performance and reliability. The permanent magnets located at the entrance of the arc chamber combined with the upper and lower arc runner increase the magnetic blow out force and aid in motivating the arc off of the contacts and into the arc chamber. An enhanced arc chamber features arc splitter retainers with integrated pressurizing walls, which facilitates heat transfer from the arc thereby providing additional cooling and quick transition into the magnetically induced splitter plates. In turn, the twelve (12) splitter plates attract, segment and cool the arc for full extinction Combined, these innovative features make the CX-Series breaker the best in class, providing stable performance even in the most demanding applications.

Resources:

Configure a Complete Part

Download CAD & Sales Drawing ›

Watch Product Video

Product Highlights:

- UL 489 & UL 489B Listed
- TUV Certified IEC/EN 60947-2
- Temperature stable hydraulic-magnetic overcurrent sensing technology
- Optional relay trip circuit permitting remote operator system shut down
- Perfect fit for 380VDC Applications

High DC Voltage Applications:

- Datacom, PDU and UPS Systems
- Power Supplies and Convertors
- Mission Critical Equipment
- Renewable Energy Systems
- Motor Controllers
- Charging Stations
- Smart Grids

Carling Technologies®
Innovative Designs. Powerful Solutions.

Carling Technologies, Inc.
60 Johnson Avenue, Plainville, CT 06062
Email: sales@carlingtech.com
Application Support: team2@carlingtech.com
Phone: 860.793.9281 **Fax:** 860.793.9231

www.carlingtech.com

CX-Series
DESIGN FEATURES

HYDRAULIC/MAGNETIC SENSING COIL

UPPER ARC RUNNER
Aids in motivating arc off of movable contact and into arc chamber

MAGNETS

ARC SPLITTER RETAINER
with integrated pressurizing walls

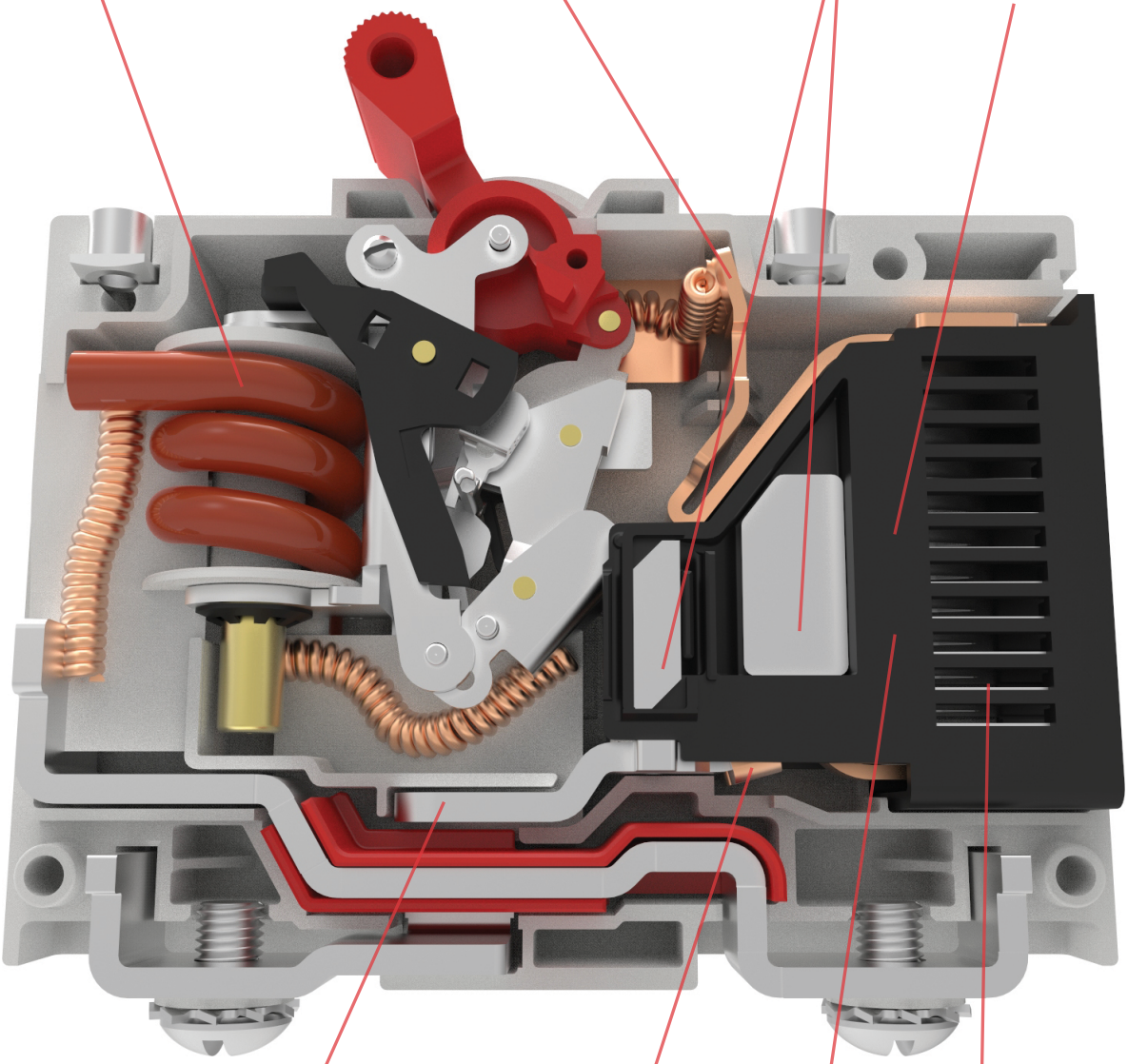

PATENT PENDING MAGNETIC FLUX BOOSTING TERMINAL CONFIGURATION
Design enhances motivation of arc into arc chamber

LOWER ARC RUNNER
Aids in motivating arc off of stationary contact and into arc chamber

LARGE ARC GAP
To generate high arc voltages

(12) ARC DEIONIZING SPLITTER PLATES

Electrical Tables

Table A: Lists UL Listed (UL489) configuration and performance capabilities as a Molded Case Circuit Breaker

CX SERIES TABLE A : UL489 LISTED BRANCH CIRCUIT BREAKERS					
CIRCUIT CONFIGURATION	VOLTAGE		MAX CURRENT RATING AMPS	INTERRUPTING CAPACITY (AMPS)	NUMBER OF POLES
	MAX. RATING	FREQUENCY			
SERIES	250	D.C.	15	5,000	1
	250 / 500	D.C.	15	10,000	2
	410 / 205	D.C.	50	10,000	2

Table B: Lists UL Recognized configurations and performance capabilities as a Component Supplementary Protector

CX SERIES TABLE B : UL1077 COMPONENT SUPPLEMENTARY PROTECTOR						
CIRCUIT CONFIGURATION	VOLTAGE		MAX CURRENT RATING AMPS	INTERRUPTING CAPACITY (AMPS)	NUMBER OF POLES	APPLICATION CODE
	MAX. RATING	FREQUENCY				
SERIES	300	D.C.	1 - 75	5,000	1	TC1, OL0, U3
	300	D.C.	76 - 125	3,000	1	TC1, OL0, U3
	440	D.C.	1 -30	10,000	2	TC1, OL0, U3
	440	D.C.	31 - 63	5,000	2	TC1, OL0, U3
	600	D.C.	1 - 75	5,000	2	TC1, OL0, U3
	600	D.C.	76 - 115	3,000	2	TC1, OL0, U3
SWITCH ONLY[1]	600	D.C.	1 - 115	----	2 or 3	---

Notes:
1 Requires inclusion of a relay trip voltage coil

Table C: Lists UL Listed (UL489B) configuration and performance capabilities as a Molded Case Switch

CX SERIES TABLE C : UL489B LISTED PHOTOVATIC MOLDED CASE SWITCH						
CIRCUIT CONFIGURATION	VOLTAGE			CURRENT RATING (AMPS)	INTERRUPTING RATING (AMPS)	CONSTRUCTION NOTES
	MAX RATING	FREQUENCY	POLES			
SERIES	600	DC	2[1]	50 - 100	600	May have a third pole that is a voltage trip pole
	600	DC	4[2]	110 - 175	600	May have a fifth pole that is a voltage trip pole

Notes:
1 Two poles in series.
2 Two poles in series in parallel with 2 poles in series.

Table D: TUV Certified Configuration to IEC / EN 60947-2. Low Voltage Switch gear and Control gear - Circuit Breakers

CX-SERIES TABLE D : TUV IEC/EN 60947-2 LOW VOLTAGE SWITCH GEAR & CONTROL GEAR / CIRCUIT BREAKER					
CIRCUIT CONFIGURATION	VOLTAGE			CURRENT RATING (AMPS)	INTERRUPTING CAPACITY
	MAX. RATING	FREQUENCY	POLES		ICS / ICU (AMPS)
SERIES	440	DC	2	1-63	4,000

*Manufacturer reserves the right to change product specification without prior notice.

Electrical

Maximum Voltage	600 VDC
Overload	50 operations at 600% of rated current for UL489, and at 150% of rated current for UL1077.

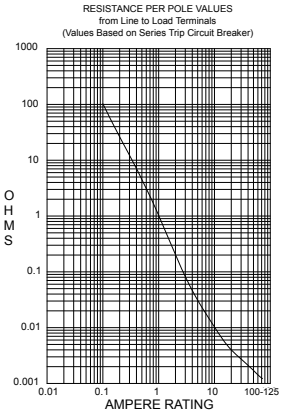

CURRENT (AMPS)	TOLERANCE (%)
0.10 - 5.0	15
5.1 - 20.0	25
20.1 - 50.0	35

Physical

Number of Poles	1- 2 poles, + Auxiliary Switch Pole.
Termination	10-32 or M5 Screw Terminals 1/4-20 or M6 Threaded Stud
Terminals	
Termination Barrier	Standard with multi-pole constructions
Mounting	Threaded insert: #6-32 UNC-2B, or M3X0.5-6H B ISO (2 per pole)
Actuator	Handle, 1 per pole.
Internal Circuit Config.	Series Trip
Materials	Housing - Glass filled Polyester Handle - Glass filled Polyester Line/Load Terminals - Copper Alloy.
Weight	~150 Grams (~5.3 Ounces). ~150 Grams (~5.3 Ounces).
Standard Color	Housing - Gray. Handle - White, Black, Red, Green, Blue, Yellow, Gray,

Mechanical

Endurance	Max 10,000 ON-OFF operations @ 6 per minute; 6000 with rated current & voltage, and 4,000 cycles mechanical.
Trip Free	Trips on overload even when actuator is forcibly held in the “On” position.
Trip Indication	The operating handle moves positively to the “Off” position when an overload causes the breaker to trip.

Environmental

Shock	Withstands 100 Gs, 6ms saw tooth while carrying rated current per MILPRF-55629 and MIL-STD-202G, Method 213G, Test Condition “I”. Instantaneous and ultra short curves tested at 90% of rated current
Vibration	Withstands 0.060” excursion from 10-55 Hz & 10 Gs 55-500 Hz, at rated current per MIL-PRF-55629 and MILSTD-202G, Method 204D, Test Cond. A. Instantaneous & ultrashort curves tested at 90% of rated current.
Moisture Resistance	MIL-PRF-55629 and MIL-STD-202G, Method 106G, i.e., Ten 24-hour cycles at +25°C to +65°C, 80-98% RH.
Salt Spray	Method 101, Condition A (90-95% RH at 5% NaCl Solution, 96 hrs).
Thermal Shock	MIL-PRF-55629 and MIL-STD-202G, Method 107G, Condition A (5-cycles at -55°C to +25°C to +85°C to +25°C).
Operating Temperature	-40°C to +85°C.

C	X	1	–	B	0	–	14	–	615	–	2	2	A	–	12	G
1 Series	*2 Actuator*	*3 Poles*		*4 Circuit*	*5 Aux/Alarm Switch*		*6 Frequency & Delay*		*7 Current Rating*		*8 Terminal*	*9 Actuator Color & Legend*	*10 Mounting Inserts*		*11 Rating*	*12 Agency Approval*

1 SERIES
C

2 ACTUATOR
X Handle, one per pole

3 POLES
1 One
2 Two

4 CIRCUIT
B Series Trip (current)

5 AUXILIARY/ALARM SWITCH
0 Without Aux Switch

6 FREQUENCY & DELAY
11 DC Ultra Short
12 DC Short
14 DC Medium
16 DC Long

7 CURRENT RATING (AMPERES)

CODE	*AMPERES*						
220	0.20	**295**	0.95	**460**	6.00	**614**	14.00
225	0.25	**410**	1.00	**465**	6.50	**615**	15.00
230	0.30	**512**	1.25	**470**	7.00	**616**	16.00
235	0.35	**415**	1.50	**475**	7.50	**617**	17.00
240	0.40	**517**	1.75	**480**	8.00	**618**	18.00
245	0.45	**420**	2.00	**485**	8.50	**620**	20.00
250	0.50	**522**	2.25	**490**	9.00	**622**	22.00
255	0.55	**425**	2.50	**495**	9.50	**624**	24.00
260	0.60	**527**	2.75	**610**	10.00	**625**	25.00
265	0.65	**430**	3.00	**710**	10.50	**630**	30.00
270	0.70	**435**	3.50	**611**	11.00	**635**	35.00
275	0.75	**440**	4.00	**711**	11.50	**640**	40.00
280	0.80	**445**	4.50	**612**	12.00	**645**	45.00
285	0.85	**450**	5.00	**712**	12.50	**650**	50.00
290	0.90	**455**	5.50	**613**	13.00		

8 TERMINAL
2 Screw Terminal, 10-32
3 Stud, 1/4-20
5 Screw Terminal, M5
6 Stud, M6

9 ACTUATOR COLOR & LEGEND

Actuator Color	I-O	ON-OFF	Dual	Legend Color
White	**A**	**B**	**1**	Black
Black	**C**	**D**	**2**	White
Red	**F**	**G**	**3**	White
Green	**H**	**J**	**4**	White
Blue	**K**	**L**	**5**	White
Yellow	**M**	**N**	**6**	Black
Gray	**P**	**Q**	**7**	Black
Orange	**R**	**S**	**8**	Black

10 MOUNTING INSERTS
A 6-32 Thread
B M3 Thread

11 MAX. APPLICATION RATING
12 250 VDC
13 250/500 VDC [1]
15 205/410 VDC

12 AGENCY APPROVAL
A Without Approvals
G UL 489 Listed
S UL 489 Listed, TUV to IEC60947-2 [1]

Notes:
1 Only Available with 250/500 VDC up to 15 amps.

C	X	2	–	S	0	–	03	–	810	–	3	2	A	–	06	14
1 Series	*2 Actuator*	*3 Poles*		*4 Circuit*	*5 Relay Trip*		*6 Frequency & Delay*		*7 Current Rating*		*8 Terminal*	*9 Actuator Color & Legend*	*10 Mounting Inserts*		*11 Rating*	*12 Agency Approval*

1 SERIES
C

2 ACTUATOR
X Handle, one per pole

3 POLES [1,2]
2 Two
3 Three
4 Four
5 Five

4 CIRCUIT
S Switch Only

5 RELAY TRIP VOLTAGE COIL RATING [1,2]
0 Without Relay Trip Voltage Coil
A 12 VDC
B 24 VDC
C 32 VDC
D 48 VDC

6 FREQUENCY & DELAY
03 DC Switch Only

7 CURRENT RATING (AMPERES) [1,3]

2-Pole Section
810 50A - 100A

4-Pole Section
917 110A - 175A

8 TERMINAL [4,5]
3 Stud, 1/4-20
6 Stud, M6
A Stud, 1/4-20, with 10-32 Screw Terminals on Voltage Pole
B Stud, M6, with M5 Screw Terminals on Voltage Pole

9 HANDLE COLOR & LEGEND

Actuator Color	I-O	ON-OFF	Dual	Legend Color
White	**A**	**B**	**1**	Black
Black	**C**	**D**	**2**	White
Red	**F**	**G**	**3**	White
Green	**H**	**J**	**4**	White
Blue	**K**	**L**	**5**	White
Yellow	**M**	**N**	**6**	Black
Gray	**P**	**Q**	**7**	Black
Orange	**R**	**S**	**8**	Black

10 MOUNTING INSERTS
A 6-32 Thread **B** M3 Thread

11 MAX. APPLICATION RATING
06 600VDC

12 AGENCY APPROVAL
A Without Approvals
14 UL489B Listed

Notes:
1 2 Pole Unit is required for ratings between 50A - 100A.
4 Pole Unit is required for ratings between 110A - 175A.
2 A Relay Trip Voltage Coil Pole may be added to either the 2 or 4 Pole construction. The addition of this extra pole dictates a change in the designation for the number of poles in selection 3.
3 For Current Ratings between 50A - 100A select current code 810 (100A).
For Current Ratings between 101A - 175A select current code 917 (175A).
4 Voltage Pole must have screw terminals.
Switch Pole must have stud terminals.
5 On 3 Pole Unit, Voltage Pole to be located at P1 as standard.
On 5 Pole Unit, Voltage Pole to be located at P3 as standard.

C	X	1	–	B	0	–	14	–	620	–	2	2	A	–	10	C
1 Series	*2 Actuator*	*3 Poles*		*4 Circuit*	*5 Aux/Alarm Switch*		*6 Frequency & Delay*		*7 Current Rating*		*8 Terminal*	*9 Actuator Color & Legend*	*10 Mounting Inserts*		*11 Rating*	*12 Agency Approval*

1 SERIES
C

2 ACTUATOR
X Handle, one per pole

3 POLES [7]
1 One
2 Two
3 Three
4 Four [10]

4 CIRCUIT
A Switch Only (no coil) [1, 9]
B Series Trip (current)
G Relay Trip (voltage) [1, 2, 3, 9]

5 AUXILIARY SWITCH
0 Without Aux Switch

6 FREQUENCY & DELAY
03 DC 50/60Hz, Switch Only
10 DC Instantaneous
11 DC Ultra Short
12 DC Short
14 DC Medium
16 DC Long

7 CURRENT RATING (AMPERES) [6]

CODE	*AMPERES*						
220	0.200	**415**	1.500	**490**	9.000	**630**	30.000
225	0.250	**517**	1.750	**495**	9.500	**635**	35.000
230	0.300	**420**	2.000	**610**	10.000	**640**	40.000
235	0.350	**522**	2.250	**710**	10.500	**650**	50.000
240	0.400	**425**	2.500	**611**	11.000	**660**	60.000
245	0.450	**527**	2.750	**711**	11.500	**665**	65.000
250	0.500	**430**	3.000	**612**	12.000	**670**	70.000
255	0.550	**435**	3.500	**712**	12.500	**675**	75.000
260	0.600	**440**	4.000	**613**	13.000	**680**	80.000
265	0.650	**445**	4.500	**614**	14.000	**685**	85.000
270	0.700	**450**	5.000	**615**	15.000	**690**	90.000
275	0.750	**455**	5.500	**616**	16.000	**695**	95.000
280	0.800	**460**	6.000	**617**	17.000	**810**	100.000
285	0.850	**465**	6.500	**618**	18.000	**911**	115.000
290	0.900	**470**	7.000	**620**	20.000	**912**	125.000
295	0.950	**475**	7.500	**622**	22.000		
410	1.000	**480**	8.000	**624**	24.000		
512	1.250	**485**	8.500	**625**	25.000		

8 TERMINAL [8]
2 Screw, 10-32
3 Stud, 1/4-20
5 Screw, M5
6 Stud, M6

9 ACTUATOR COLOR & LEGEND

Actuator Color	I-O	ON-OFF	Dual	Legend Color
White	**A**	**B**	**1**	Black
Black	**C**	**D**	**2**	White
Red	**F**	**G**	**3**	White
Green	**H**	**J**	**4**	White
Blue	**K**	**L**	**5**	White
Yellow	**M**	**N**	**6**	Black
Gray	**P**	**Q**	**7**	Black
Orange	**R**	**S**	**8**	Black

10 MOUNTING INSERTS
A 6-32 Thread
B M3 Thread

11 MAX. APPLICATION RATING
10 300VDC
11 440 VDC without factory installed terminal bus [4]
14 440VDC with factory installed terminal bus [4]
06 600VDC [5]
18 220/440VDC [11]

12 AGENCY APPROVAL
A Without Approvals
C UL 1077 Recognized
W UL 1077 Recognized & TUV Certified IEC/ EN 60947-2 [9]

Notes:
1 Only available when tied to a protected pole.
Requires special part number consult factory for details
2 Voltage trip circuit coil not rated for continuous duty - use instantaneous delay code 10
3 Contacts Rated for 20A @ 80 VDC
4 440 VDC Rating available in two different wiring configurations.
5 600 VDC only available with factory installed terminal bus.
6 Single pole units available up to 125A, multi pole units limited to 115A Max.
7 3 Pole units must include one Auxiliary switch pole (circuit code A or G) - Requires Special Part Number. Unless breaker is rated 220/440 VDC (Voltage Code 18) in which case Circuit Code B is required.
8 Screw Terminals are limited to 50A max.
9 Agency approval code W only available with 440 VDC or 220/440 VDC rating and circuit code B.
10 4 Pole 600 VDC units only available up to 75A Max.
11 3 Pole 220/440 VDC units only available in one specific wiring configuration.
See dimensional specifications pages for more details

Dimensional Specifications: in. [mm]

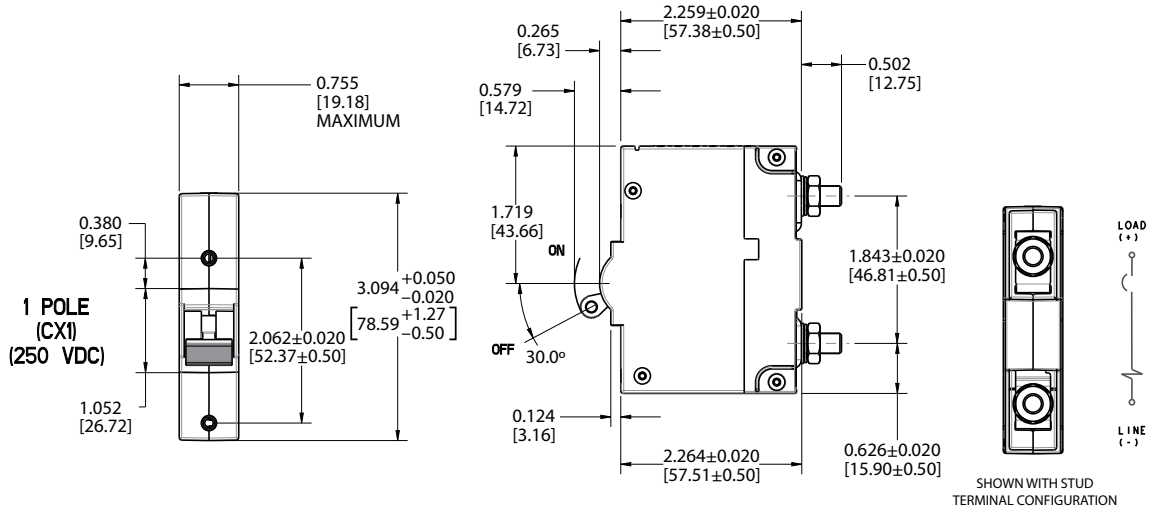

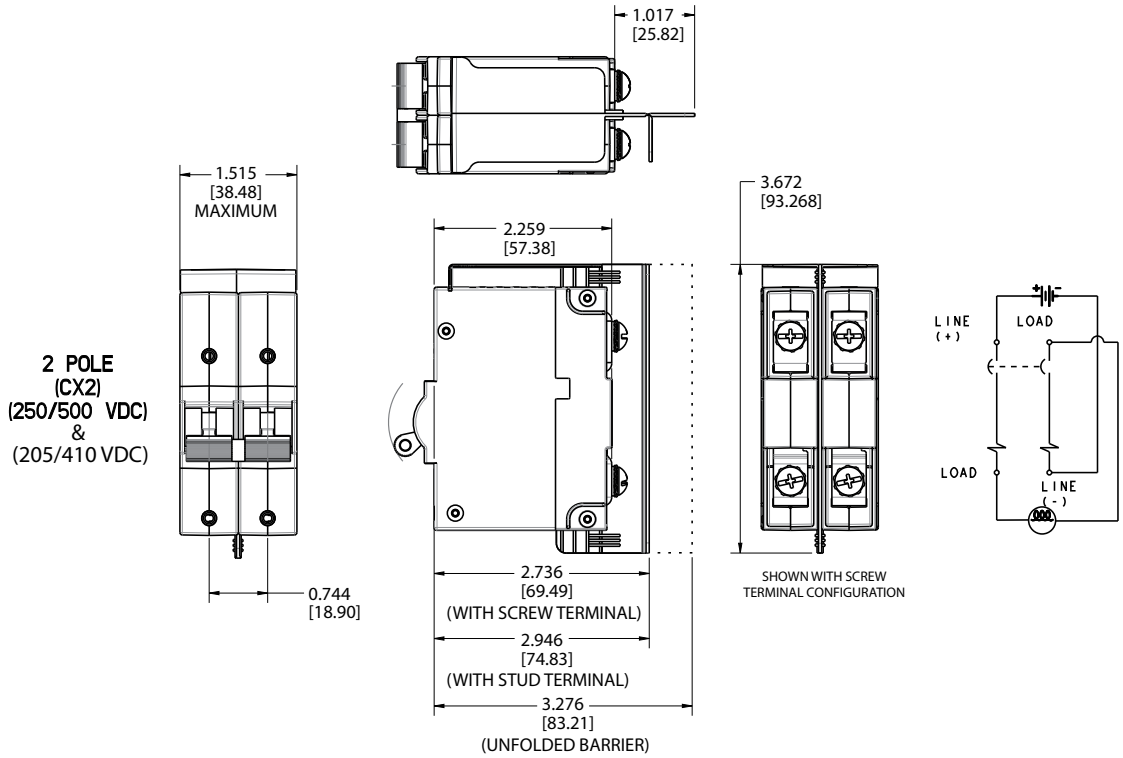

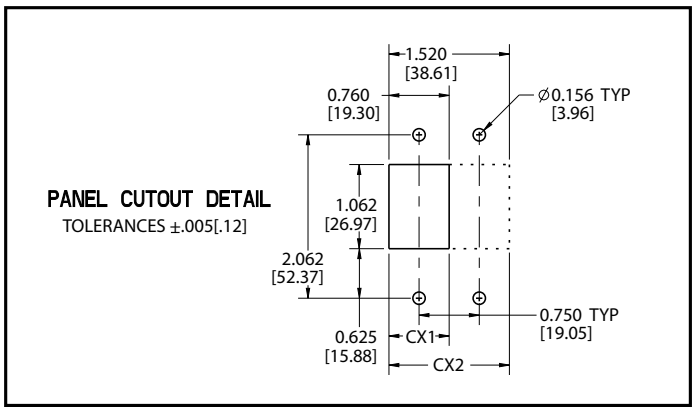

Notes:
1 All dimensions are in inches [millimeters].
2 Tolerance ±.020 [.51] unless otherwise specified.

CLA-8119 Rev: C

Dimensional Specifications: in. [mm]

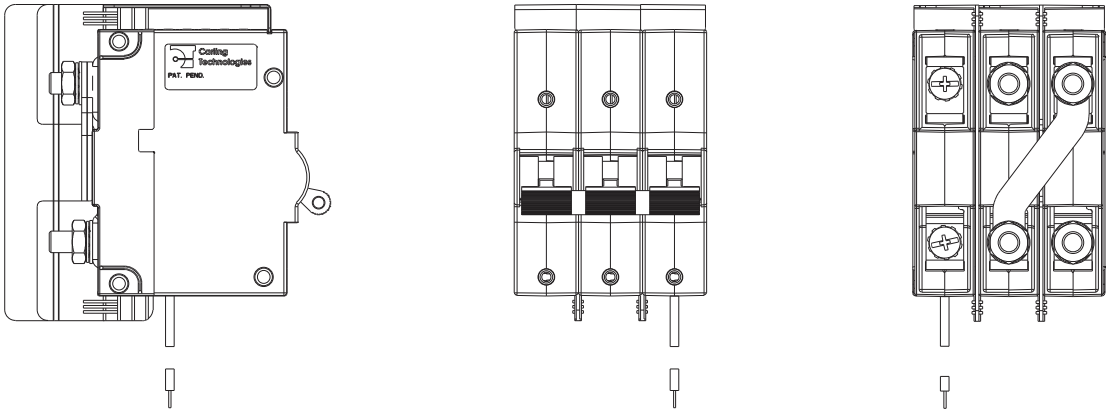

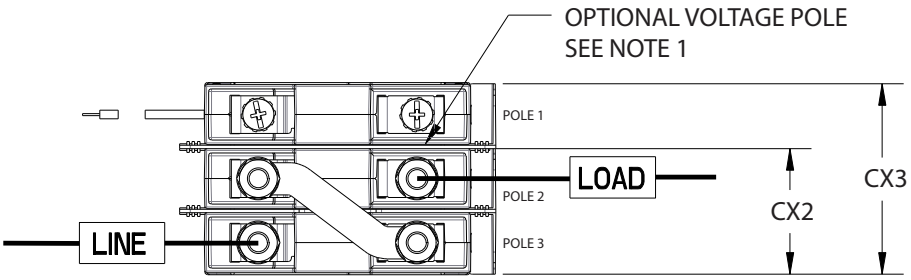

CX3 - 2 POLE SWITCH (CX2)SHOWN
WITH OPTIONAL VOLTAGE POLE
50A-100A DEVICE, 600VDC

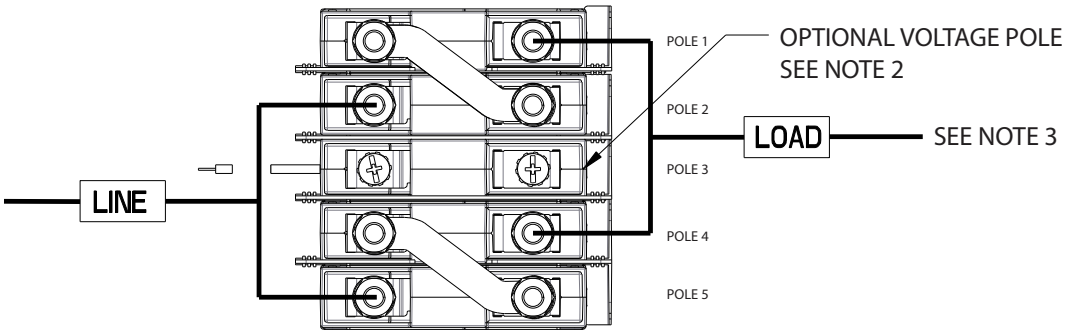

CX5 - 4 POLE SWITCH (CX4)SHOWN
WITH OPTIONAL VOLTAGE POLE
101A-175A DEVICE, 600VDC

Notes:
1 All dimensions are in inches [millimeters].
2 3 pole configuration supplied with voltage coil on pole 1. Optional location pole 3. Consult factory.
3 5 pole configuration supplied with voltage coil in center pole. (Pole 3)
4 Line & Load connections requires bus connection as shown.
Minimum cross selection .127 in^2 (81.94 mm^2)

Dimensional Specifications: in. [mm]

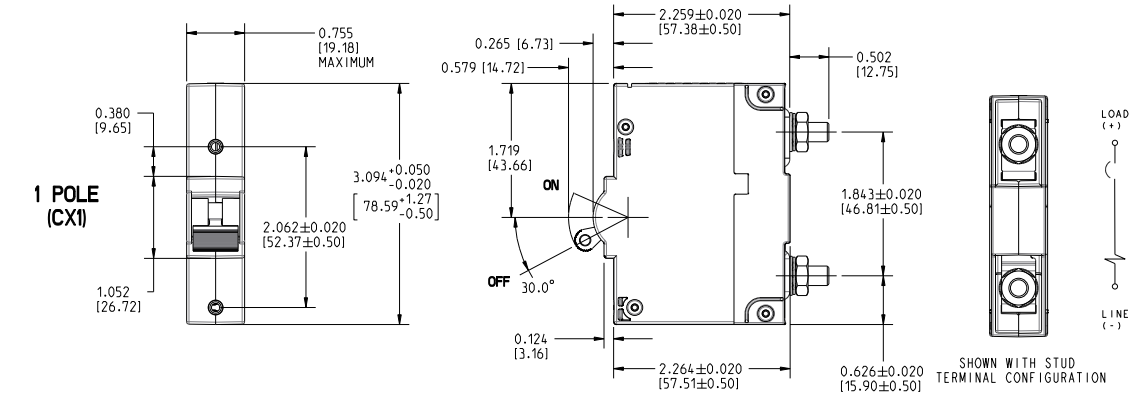

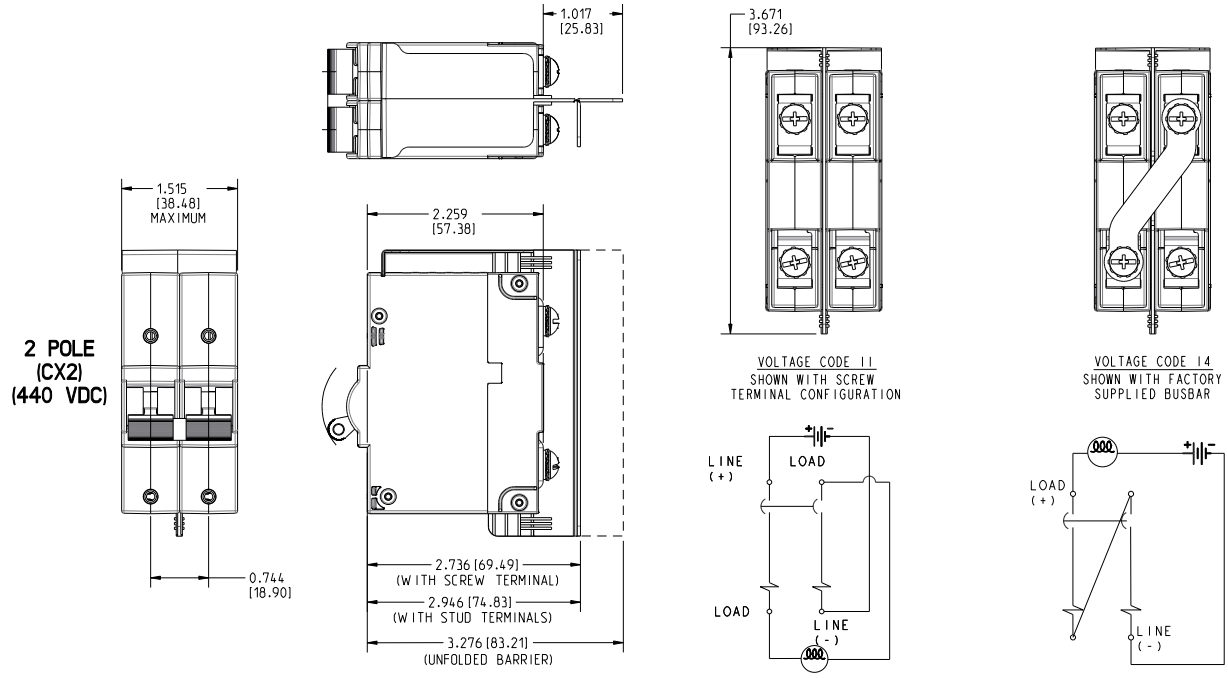

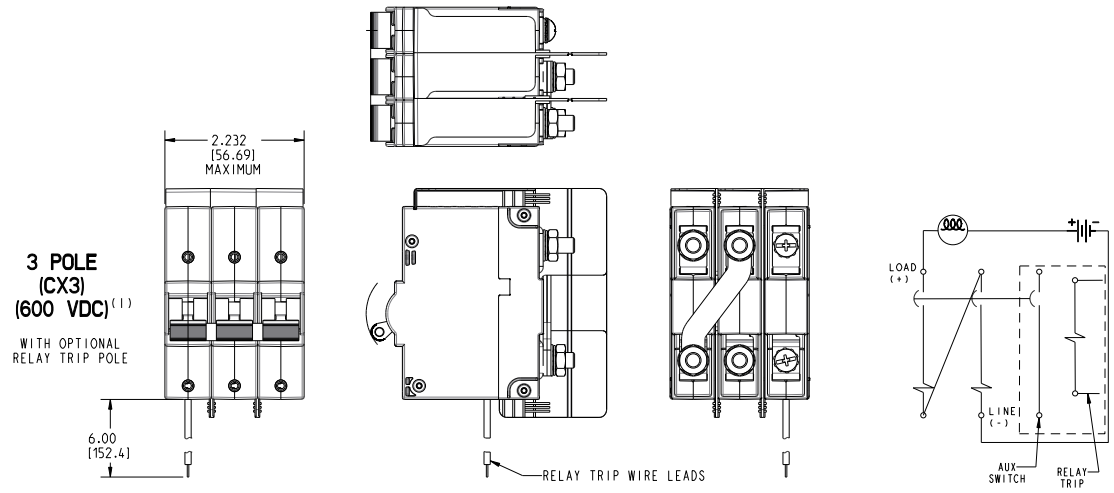

(1) 600V RATING REQUIRES MINIMUM OF 2 PROTECTED POLES

Notes:
1 All dimensions are in inches [millimeters].
2 600V Rating requires minimum of 2 protected poles

CLA-8118 Rev: E

Dimensional Specifications: in. [mm]

3 POLE
(CX3)
(220/440 VDC)

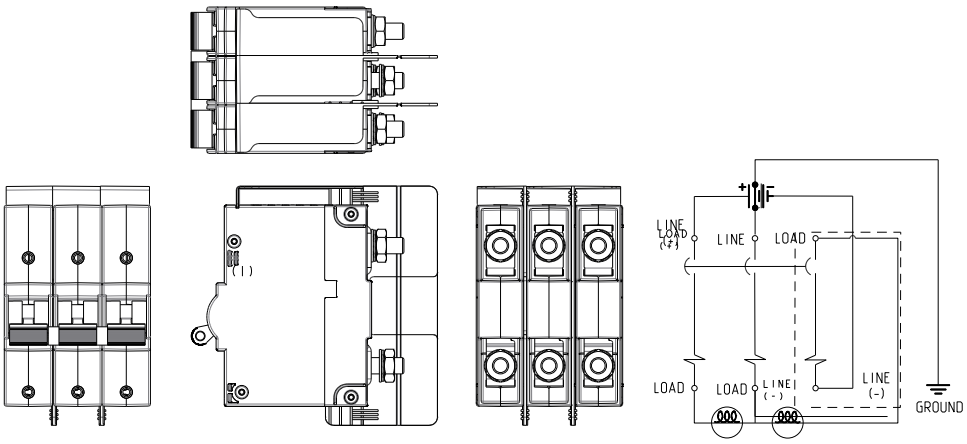

4 POLE (1,2)
(CX4)
(600 VDC)

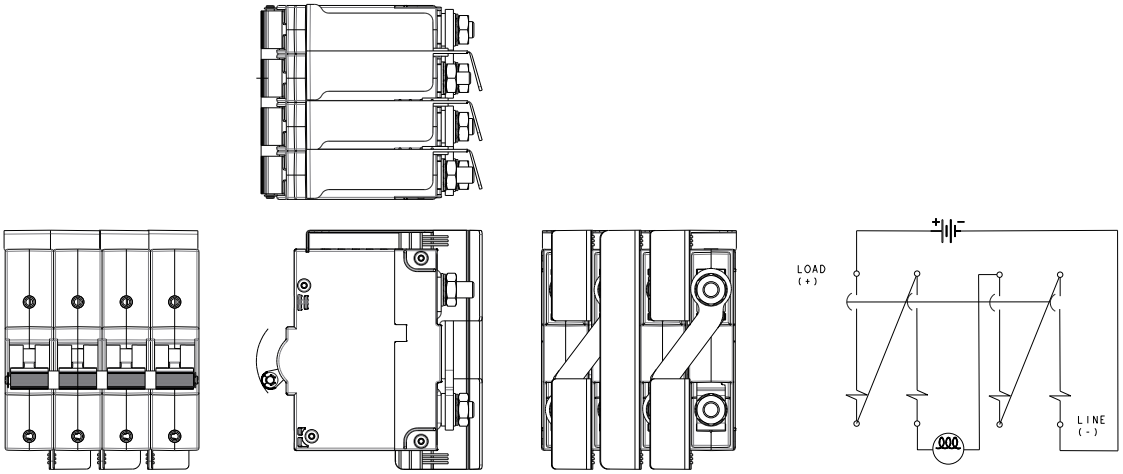

(2) FOUR POLE UNIT AVAILABLE UP TO 75A MAXIMUM

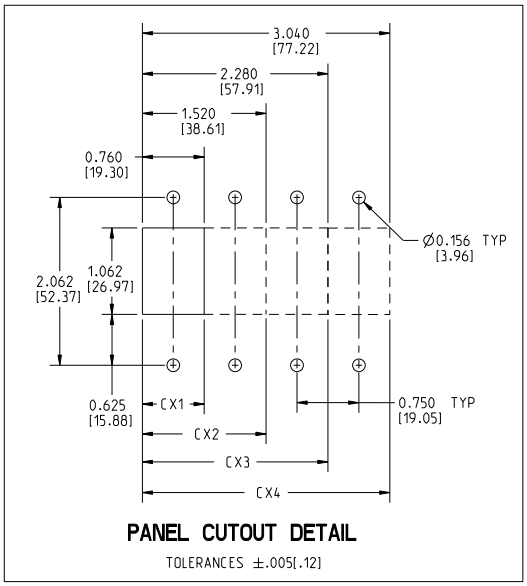

Notes:
1 All dimensions are in inches [millimeters].
2 600V Rating requires minimum of 2 protected poles

CLA-8118 Rev: E

Authorized Sales Representatives and Distributors

Click on a region of the map below to find your local representatives and distributors or visit ***www.carlingtech.com/findarep***.

About Carling

Founded in 1920, Carling Technologies is a leading manufacturer of electrical and electronic switches and assemblies, circuit breakers, electronic controls, power distribution units, and multiplexed power distribution systems. With four ISO9001 and IATF16949 registered manufacturing facilities and technical sales offices worldwide, Carling Technologies Sales, Service and Engineering teams do much more than manufacture electrical components, they engineer powerful solutions! To learn more about Carling please visit **www.carlingtech.com/company-profile.**

To view all of Carling's environmental, quality, health & safety certifications please visit **www.carlingtech.com/environmental-certifications**

Worldwide Headquarters
Carling Technologies, Inc.
60 Johnson Avenue, Plainville, CT 06062
Phone: 860.793.9281 **Fax:** 860.793.9231
Email: sales@carlingtech.com

Northern Region Sales Office: nrsm@carlingtech.com
Southeast Region Sales Office: sersm@carlingtech.com
Midwest Region Sales Office: mrsm@carlingtech.com
West Region Sales Office: wrsm@carlingtech.com
Latin America Sales Office: larsm@carlingtech.com

Asia-Pacific Headquarters
Carling Technologies, Asia-Pacific Ltd.,
Suite 1607, 16/F Tower 2, The Gateway,
Harbour City, 25 Canton Road,
Tsimshatsui, Kowloon, Hong Kong
Phone: Int + 852-2737-2277 **Fax:** Int + 852-2736-9332
Email: sales@carlingtech.com.hk

Shenzhen, China: shenzhen@carlingtech.com
Shanghai, China: shanghai@carlingtech.com
Pune, India: india@carlingtech.com
Kaohsiung, Taiwan: taiwan@carlingtech.com
Yokohama, Japan: japan@carlingtech.com

Europe | Middle East | Africa Headquarters
Carling Technologies LTD
4 Airport Business Park, Exeter Airport,
Clyst Honiton, Exeter, Devon, EX5 2UL, UK
Phone: Int + 44 1392.364422 **Fax:** Int + 44 1392.364477
Email: ltd.sales@carlingtech.com

Germany: gmbh@carlingtech.com
France: sas@carlingtech.com

Carling Technologies®
Innovative Designs. Powerful Solutions.

Mouser Electronics

Authorized Distributor

Click to View Pricing, Inventory, Delivery & Lifecycle Information:

Carling Technologies:

CX1-B0-14-660-62B-10-C CX1-B0-14-650-62B-10-C CX1-B0-14-640-62B-10-C CX1-B0-14-635-62B-10-C CX1-B0-14-630-62B-10-C CX1-B0-14-625-62B-10-C CX1-B0-14-624-62B-10-C CX1-B0-14-622-62B-10-C CX1-B0-14-810-62B-10-C CX1-B0-14-912-62B-10-C CX1-B0-14-620-62B-10-C CX1-B0-14-650-52B-10-C CX1-B0-14-640-52B-10-C CX1-B0-14-635-52B-10-C CX1-B0-14-630-52B-10-C CX1-B0-14-625-52B-10-C CX1-B0-14-624-52B-10-C CX1-B0-14-622-52B-10-C CX1-B0-14-620-52B-10-C CX1-B0-14-618-52B-10-C CX1-B0-14-617-52B-10-C CX1-B0-14-616-52B-10-C CX1-B0-14-615-52B-10-C CX1-B0-10-912-32A-10C CX1-B0-11-615-22A-12G CX1-B0-11-630-22A-10C CX1-B0-14-616-2CA-10C CX1-B0-14-620-2CA-10C CX1-B0-14-630-2CA-10C CX1-B0-14-650-3AA-10C CX1-B0-14-660-32B-10C CX1-B0-14-675-32B-10C CX1-B0-14-690-32B-10C CX1-B0-16-810-3DA-10C CX1-X0-19-671-22A-12G CX1-X0-19-672-22A-10C CX2-B0-11-475-22A-11C CX2-B0-11-615-22A-13G CX2-B0-12-640-21A-11C CX2-B0-14-615-22A-11C CX2-B0-14-615-22C-06C CX2-B0-14-615-2AA-13G CX2-B0-14-615-32A-13G CX2-B0-14-616-52B-06-C CX2-B0-14-630-22A-11C CX2-B0-14-632-52B-06-C CX2-B0-14-650-52B-11C CX2-B0-14-810-32B-10C CX2-B0-14-810-3GB-06C CX2-B0-16-616-5CB-11C CX2-B0-16-620-5CB-11C CX2-B0-14-475-22A-13G CX2-B0-14-610-22A-13G CX2-B0-12-615-22A-13G CX2-B0-14-810-6GB-06C CX2-B0-16-810-3DA-06C CX1-B0-14-430-51B-10C CX2-B0-14-630-22A-06C CX2-B0-14-430-31A-13G CX2-B0-14-610-32A-11W CX2-B0-14-615-31A-13G CX2-B0-14-620-32A-11C CX2-B0-14-650-32A-11C CX2-B0-16-615-22A-13G CX2-X0-24-119-62B-15G