REVISIONS			
REV	DESCRIPTION	DATE	APPROVED
01_2	REDRAWN ON CAD ECN 94-0561	1/4/95	1/4/95

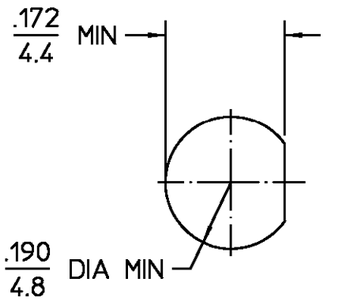

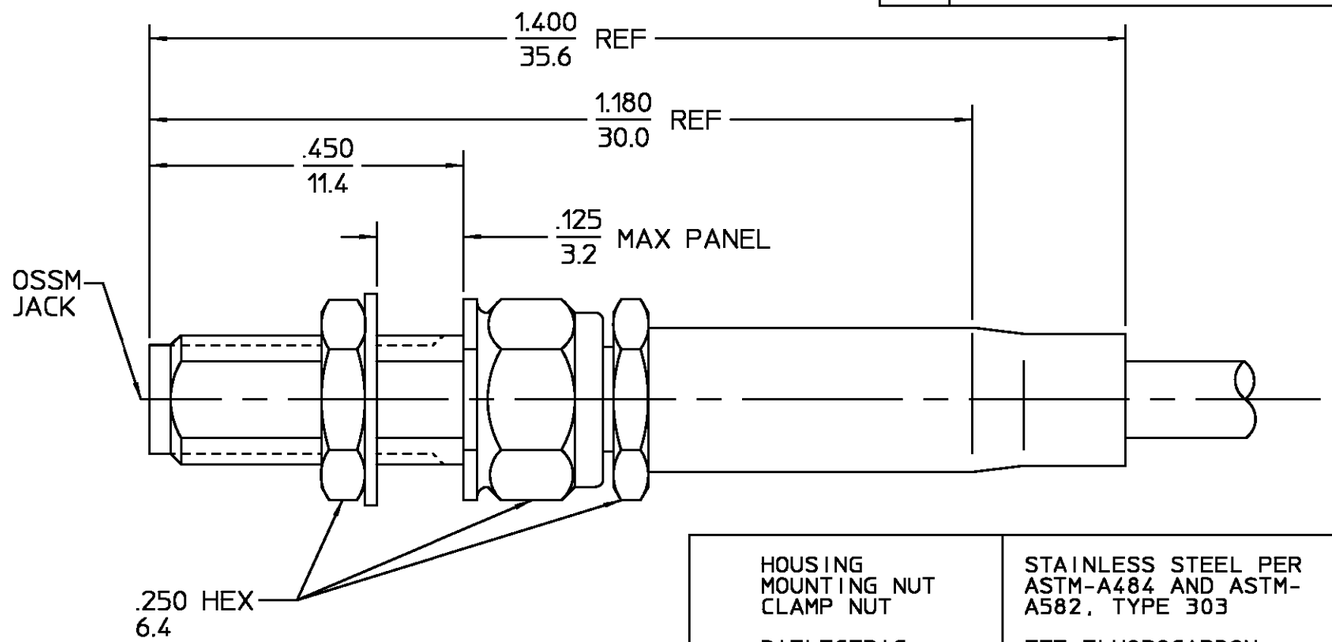

DESIGNED FOR USE WITH RG174/U,179,187,188,& 316	
CABLE ENTRY DIAMETER MINIMUM	
SLEEVE	.067
CONTACT	.024
DIELECTRIC	.066

ELECTRICAL	MECHANICAL	ENVIRONMENTAL
Nominal Impedance (Ohms) 50	Interface Dimensions MIL-STD-348A,	Temperature Rating -65°C to +165°C
Frequency Range (GHz) DC to 26	Fig. 319-2	Vibration MIL-STD-202, Method
Volt Rating (VRMS MAX)	Recommended Mating	204, Condition D
@ Sea Level 250	Torque 5 In. Lbs.	Shock MIL-STD-202, Method 213,
VSWR 1.07+.015f (f in GHz)	Mating Characteristics:	Condition I
Insertion Loss (dB MAX) $.04\sqrt{f}$GHz	Insertion (MAX Lbs) 3	Thermal Shock MIL-STD-202,
RF Leakage (dB MIN) -60	Withdrawal (MIN Oz) 1	Method 107, Condition B,
Corona, 70,000 Ft (VRMS MIN) 190	Force to Engage and	Except High Temp -85°C
Dielectric Withstanding Voltage	Disengage (In-Lbs MAX) 2.0	Moisture Resistance MIL-STD-202,
(VRMS MIN) @ Sea Level 750	Center Contact Captivation	Method 106
Contact Resistance (Milliohms MAX)	Axial (Lbs) 6.0	Corrosion - MIL-STD-202, Method
Center Contact 4.0	Radial (In-Oz) N/A	101, Condition B, 5% salt spray
Outer Contact 2.0	Cable Retention	
Cable to Housing 0.5	Axial Force (Lbs) 20	
RF High Potential @ Sea Level	Torque (In-Oz) N/A	.XXX = in
(VRMS MIN @ 5 MHz) 500	Weight (Grams) 2.4	XX.X = mm
I.R.(Megohms MIN) 5,000		

COMPONENT	MATERIAL	FINISH
HOUSING MOUNTING NUT CLAMP NUT	STAINLESS STEEL PER ASTM-A484 AND ASTM-A582, TYPE 303	GOLD PLATE PER MIL-G-45204
DIELECTRIC	TFE FLUOROCARBON PER ASTM-D-1457	N/A
CENTER CONTACT	BERYLLIUM COPPER PER ASTM-B-196 OR ASTM-B-197, ALLOY C17300, CONDITION H	GOLD PLATE PER MIL-G-45204
SHRINK TUBING	HEAT SHRINKABLE POLYOLEFIN COMPOUND MIL-I-23053/4	N/A
CRIMP SLEEVE	COPPER OR BRASS ALLOY ROCKWELL F65 MAX	GOLD PLATE PER MIL-G-45204

UNLESS OTHERWISE SPECIFIED DIMENSIONS ARE IN INCHES

FRAC.	DEC.	ANGLES
± 1/64	±.005	± 1°

		DATE
DRAWN BY	EJC	10/18/71
CHECKED BY	PRB	10/19/71
APP'D BY	BWC.	10/19/71

AMP Incorporated
140 Fourth Avenue
Waltham, MA 02451-7599

These drawings and specifications are the property of M/A COM Interconnect Div. and shall not be reproduced or copied or used in whole or in part as the basis for the manufacture or sale of item(s) without written permission.

USE ASS'Y PROCEDURE

NO. A.P. 408-04784 (10-018)

TITLE
OSSM BULKHEAD FEEDTHRU
CABLE JACK-CRIMP ATTACHMENT

SIZE	CODE IDENT NO.		REV
B	26805	1034-7188-00	01_2
SCALE 5/1			SHEET 1 OF 1

CUSTOMER DRAWING

AMP PART # 1045502-1
SHEET 1 OF 1 REV A

Mouser Electronics

Authorized Distributor

Click to View Pricing, Inventory, Delivery & Lifecycle Information:

TE Connectivity:

1045502-1