DRAWING MADE IN THIRD ANGLE PROJECTION

PART NUMBER	REV	FIRST USED
1385224-1	A	122500-1
1385224-2	A	565435-5
1385224-3	A	354500-1

1385224 ⇨ 1385224

/auto/data/asg/medusa/appl/ftb

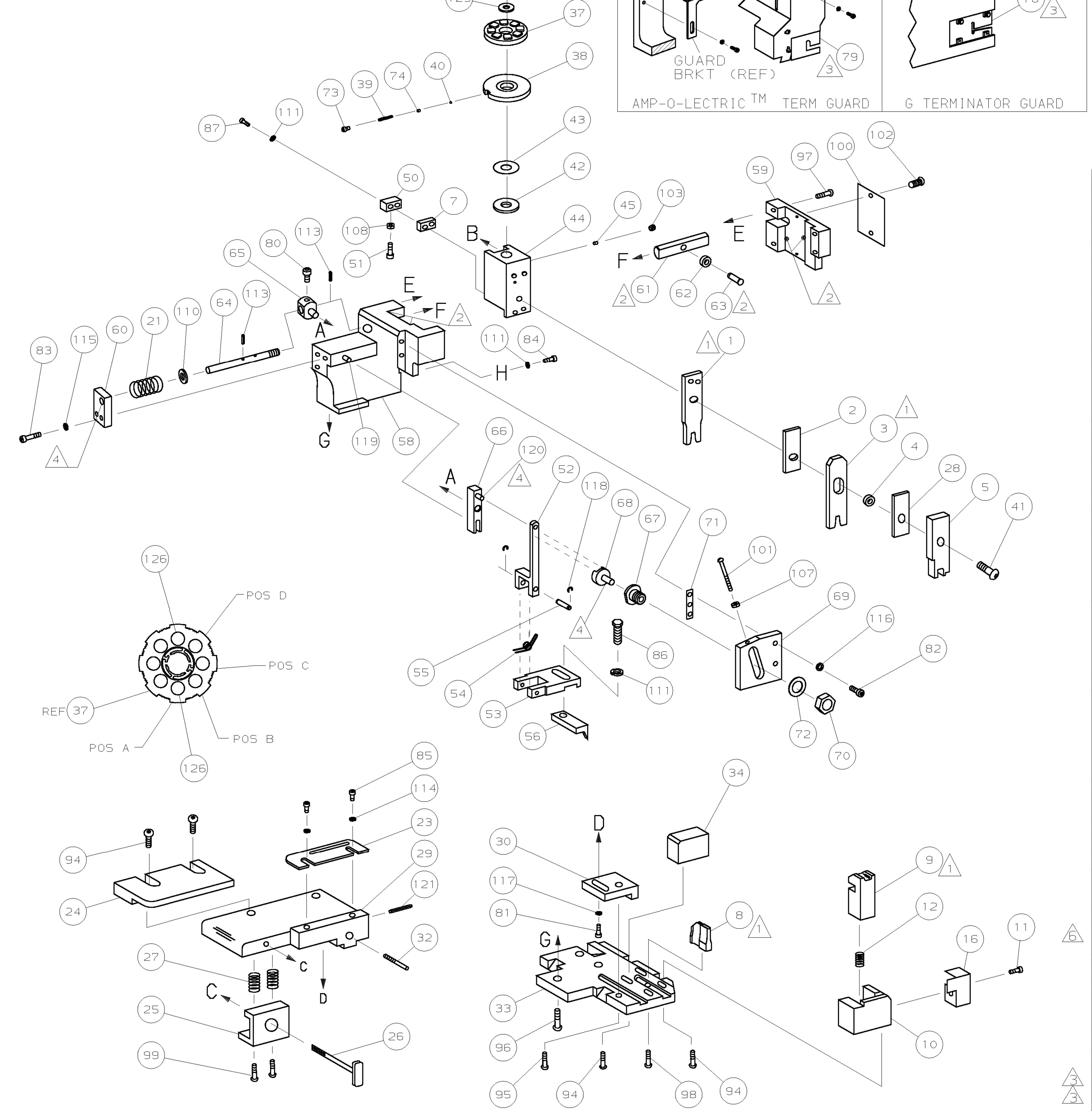

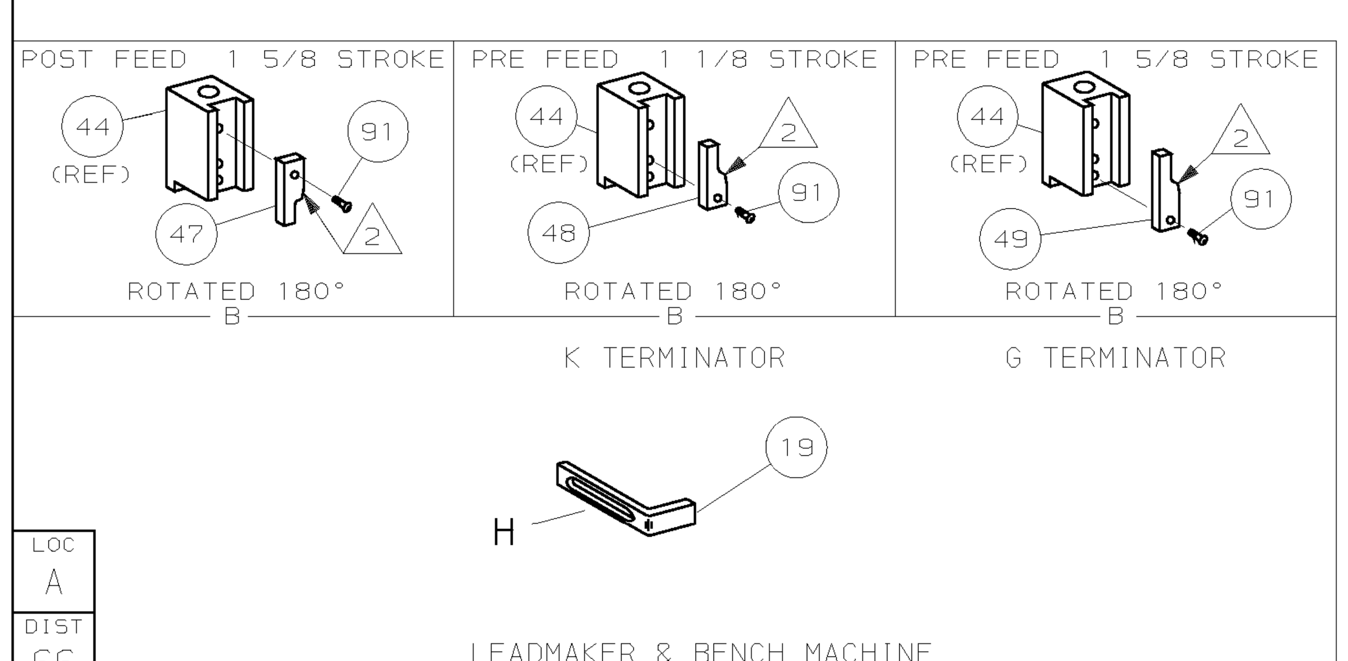

TERMINAL NAME: PIN CONTACT

AMP PN	MFR PN	PAD LTR	CRIMP HEIGHT	WIRE SIZE
286922	MX5-PW-PC1-5500	A	.041 ±.002 [1.04 ±0.05mm]	18
		B	NOT	USED
		C	NOT	USED
		D	NOT	USED

JAE TERMINAL CUST CRIMP SPECS

CRIMP	SIZE	TYPE	RANGE
WIRE	.090 [2.29mm]	F	18
INSUL	.090 [2.29mm]	F	ø.080

WIRE STRIP LENGTH	TERM APPL SPEC	FEED	APPL INSTRUCTION	SET UP GAGE	LAYOUT
.156-.188	NONE	.382	408-8040	458637-1	L2493

-1	LEADMAKER	MECH POST FEED
-2	BENCH MODEL K	MECH PRE FEED
-3	BENCH MODEL G	MECH PRE FEED

NOTE	-3	-2	-1	U/M	DWG SIZE	PART NO	DESCRIPTION	ITEM NO
								129
								128
								127
	2	2	2	-	C	4-354779-9	PIN, WIRE DISC (.3235)A	126
	1	1	1	-	A	986950-1	WASHER, FLAT PRECISION	125
	1	1	1	-	A	217238-1	GENERAL INSTRUCTION PACKAGE	124
	1	1	1	-	-	4088040	SF APPL INST 408-8040	123
								122
	1	1	1	-	A	4-21028-0	PIN,SLT SPR(ø.093x.75)ST GDE PL	121
	REF	REF	REF	-	A	1-21030-1	PIN,DOWEL(ø.187x.50)LEVER	120
	REF	REF	REF	-	A	1-21030-6	PIN,DOWEL(ø.187x1.25)HOUSING	119
	REF	REF	REF	-	A	21045-3	RING,RET "C"(ø.187)FD FING PIN	118
	1	1	1	-	A	21024-5	WASHER, LOCK(#10)ADJ BLOCK	117
	REF	REF	REF	-	A	21024-5	WASHER,LOCK(#10)ADJ PLATE	116
	REF	REF	REF	-	A	21024-5	WASHER,LOCK(#10)FEED GDE ROD	115
	2	2	2	-	A	21024-2	WASHER,LOCK(#4)FRONT STP GUIDE	114
	REF	REF	REF	-	A	5-21028-1	PIN,SLT SPR(ø.125x.50)ADJ ROD	113
								112
	4	4	4	-	A	21024-4	WASHER,LOCK(#8)STRIPPER	111
	REF	REF	REF	-	A	21899-4	WASHER,FLAT(ø5/16)SCREW ADJ	110
								109
	1	1	1	-	A	21018-5	NUT,HEX(NO.6)HOLDDOWN	108
	REF	REF	REF	-	A	21068-5	NUT,HEX(6-32)FEED ADJ	107
								106
								105
								104
	1	1	1	-	A	21009-2	SCR,SKT SET(1/4-20x.25 LW)RAM	103
	2	2	2	-	A	21017-2	SCR,DRIVE(#2x.19)ID PLATE	102
	REF	REF	REF	-	A	6-23715-5	SCR,PAN HD(6-32x1.50)FEED ADJ	101
	1	1	1	-	B	461264-1	PLATE, IDENTIFICATION	100
	2	2	2	-	A	3-21002-0	SCR,BHC(10-32x.88)DRAG	99
	1	1	1	-	A	22733-8	SCR,BHC(8-32x.38 LW)ANVIL	98
	REF	REF	REF	-	A	2-21002-9	SCR,BHC(10-32x.75)CAP	97
	REF	REF	REF	-	A	2-22733-8	SCR,BHC(1/4-20x.62)HOUSING	96
	REF	REF	REF	-	A	2-21002-7	SCR,BHC(10-32x.50)SG ADJ BLOCK	95
	6	6	6	-	A	2-21002-2	SCR,BHC(8-32x.50)TERM H DWN	94
								93
								92
	1	1	1	-	A	1-21002-7	SCR,BHC(6-32x.38)CAM	91
								90
								89
								88
6	2	2	2	-	A	2-21000-8	SCR,SHC(8-32x.57)DEP-HOLD	87
	1	1	1	-	A	2-22603-0	SCR,HEX HD(8-32x.31)FEED FINGER	86
	2	2	2	-	A	1-21000-3	SCR,SHC(4-40x.25)F ST GUIDE	85
	1	1	1	-	A	2-21000-7	SCR,SHC(8-32x.50)STRIPPER	84
	REF	REF	REF	-	A	3-21000-7	SCR,SHC(10-32x.75)FEED ROD GD	83
	REF	REF	REF	-	A	3-21000-6	SCR,SHC(10-32x.62)FD ADJ BLK	82
	1	1	1	-	A	3-21000-4	SCR,SHC(10-32x.38)SG ADJ BL	81
	REF	REF	REF	-	A	3-21000-4	SCR,SHC(10-32x.38)PIVOT BLK	80
3	-	REF	-	-	B	455749-1	GUARD, WINDOW	79
3	REF	-	-	-	B	679532-1	INSERT, GUARD	78
								77
								76
								75
	1	1	1	-	A	690603-1	SPRING, ASSIST	74
	1	1	1	-	A	23030-1	SCR,SHC(6-32x.25 SL)INS DISC	73
	REF	REF	REF	-	A	458109-1	WASHER, SPECIAL	72
	REF	REF	REF	-	A	690517-1	SPACER	71

QTY REQD PER ASSY — PARTS LIST

NOTE	-3	-2	-1	U/M	DWG SIZE	PART NO	DESCRIPTION	ITEM NO
	REF	REF	REF	-	B	22594-8	NUT,HEX(1/2-20)	70
	REF	REF	REF	-	B	240628-1	PLATE, ADJUSTMENT	69
	REF	REF	REF	-	B	240626-1	SHAFT, PIVOT	68
	REF	REF	REF	-	B	240633-1	BUSHING	67
	REF	REF	REF	-	A	455680-1	LEVER, INTERMEDIATE	66
	REF	REF	REF	-	B	240629-1	BLOCK, PIVOT	65
	REF	REF	REF	-	A	240632-2	SCREW, ADJ FEED ROD	64
	REF	REF	REF	-	B	240659-3	PIN, CAM ROLLER	63
	REF	REF	REF	-	B	240658-1	ROLLER, CAM	62
	REF	REF	REF	-	B	454398-2	ROD, FEED	61
	REF	REF	REF	-	A	454178-1	GUIDE, FEED ROD	60
	REF	REF	REF	-	C	454220-1	CAP, RAM	59
	REF	REF	REF	-	D	454485-1	HOUSING	58
								57
	1	1	1	-	B	690542-2	PAWL, FEED	56
	REF	REF	REF	-	B	240624-1	PIN, FEED FINGER	55
	REF	REF	REF	-	B	691499-1	SPRING, FEED FINGER	54
	REF	REF	REF	-	B	690541-1	HOLDER, FEED FINGER	53
	REF	REF	REF	-	A	455679-1	LEVER, TERMINAL FEED ARM	52
	1	1	1	-	A	811242-2	BUMPER, HOLDDOWN	51
	1	1	1	-	A	690753-1	SPACER, TONKER	50
	1	-	-	-	B	690602-6	CAM, PRE-FEED 1 5/8 ST	49
	-	1	-	-	B	690602-5	CAM, PRE-FEED 1 1/8 ST	48
	-	-	1	-	B	690501-4	CAM, POST-FEED 1 5/8 ST	47
	1	1	1	-	B	459456-1	APPLICATOR, BASIC (SUBASSY)	46
	1	1	1	-	A	690191-1	PLUG, NYLON	45
	1	1	1	-	C	455673-1	RAM	44
	1	1	1	-	A	690125-1	WASHER, LAMINATED	43
	1	1	1	-	A	690124-1	WASHER, RAM	42
	1	1	1	-	A	7-21002-9	BOLT, CRIMPER(5/16x1.00)	41
	1	1	1	-	A	23241-6	BALL, STEEL	40
	1	1	1	-	A	690170-1	SPRING, COMPRESSION	39
	1	1	1	-	C	690142-1	DISC, INSULATION	38
	1	1	1	-	D	354777-1	WIRE DISC, PLASTIC	37
	1	1	1	-	A	22480-5	WASHER, SPRING	36
	1	1	1	-	B	690212-1	POST, RAM	35
	1	1	1	-	B	690786-6	SUPPORT, TERMINAL	34
	REF	REF	REF	-	D	455675-1	PLATE, BASE	33
	1	1	1	-	A	690432-3	SCREW, ADJUSTMENT	32
								31
	REF	REF	REF	-	B	455689-1	BLOCK, STRIP GUIDE ADJ	30
	1	1	1	-	C	455671-1	PLATE, STRIP GUIDE	29
	1	1	1	-	C	1-455888-0	SPACER, FRONT SHEAR DEP	28
	2	2	2	-	A	1-22284-0	SPRING, DRAG	27
	1	1	1	-	B	690546-1	LEVER, DRAG RELEASE	26
	1	1	1	-	B	240792-1	DRAG, TERMINAL	25
7	1	1	1	-	D	6-690504-6	GUIDE, STRIP (REAR)	24
	1	1	1	-	A	690438-1	GUIDE, STRIP (FRONT)	23
								22
	REF	REF	REF	-	A	4-22284-9	SPRING, FEED RETURN	21
								20
8	1	1	1	-	B	690472-9	STRIPPER	19
								18
								17
	1	1	1	-	B	318563-1	GUARD, CHIP, FRONT	16
								15
								14
								13
	1	1	1	-	A	5-22280-0	SPRING, SHEAR	12
	1	1	1	-	B	690461-1	STOP, SHEAR	11
	1	1	1	-	C	690459-1	HOLDER, SHEAR (FRONT)	10
1	1	1	1	-	C	454276-1	SHEAR, FLOAT (FRONT)	9
1	1	1	1	-	C	454055-4	ANVIL	8
	1	1	1	-	C	6-240641-5	SPACER, DEPRESSOR (REAR)	7
								6
	1	1	1	-	C	1-455889-4	DEPRESSOR, SHEAR (FRONT)	5
	1	1	1	-	B	2-238011-5	SPACER, BLOCK CRIMPER	4
1	1	1	1	-	C	5-456134-3	CRIMPER, INSULATION	3
	1	1	1	-	C	455888-7	SPACER, CRIMPER	2
1	1	1	1	-	C	3-456406-3	CRIMPER, WIRE	1

← REVISION OF EACH ASSY NO (WHEN BLANK, USE DWG REVISION)

QTY REQD PER ASSY — PARTS LIST

1. RECOMMENDED SPARE PARTS.
2. GREASE LIGHTLY.
3. GUARD MUST BE IN PLACE WHEN OPERATING APPLICATOR IN A BENCH MACHINE.
4. LUBRICATE DAILY USING NO. 20 MACHINE OIL.
5. ITEMS WITH QTY OF REF SPECIFIED (EXCEPT ITEMS 78 AND 79) ARE USED ON ITEM 46.
6. CUT TO LENGTH AT ASSY
7. GUIDE ON INSULATION BARREL.
8. POSITION BETWEEN WIRE AND INSULATION CRIMPERS.

P	F	LTR	REVISION RECORD	APP	DATE
		A	RELEASED	TE	2-01

DIMENSIONS IN INCHES. DO NOT SCALE PRINT. TOLERANCES UNLESS OTHERWISE SPECIFIED: 2 PLC DEC ±- 3 PLC DEC ±- 4 PLC DEC ±- ANGLES ± - SURF TEXTURE: √ REMOVE BURRS, BREAK SHARP EDGES R.015 MAX

MATL – – | HT TR – – | FIN – –

DR 26JAN01 R.O.WILSON | APP 29JAN01 T.ELBIN | CHK 26JAN01 R.O.WILSON | REL – –

AMP Incorporated Harrisburg, PA 17105-3608

NAME SIDE FEED HDM APPLICATOR | MACHINE REF MINI APPL

SCALE – | D | DWG NO 1385224 | SHEET 1 OF 1 | REV A

CAGE CODE 00779 | CUSTOMER AND ASSEMBLY DRAWING | RESTRICTED TO –

LOC A | DIST 66

THIS DRAWING IS A CONTROLLED DOCUMENT.
THIS DRAWING IS UNPUBLISHED. © COPYRIGHT 2001 BY AMP INCORPORATED. ALL RIGHTS RESERVED. RELEASED FOR PUBLICATION 07FEB,2001

Mouser Electronics

Authorized Distributor

Click to View Pricing, Inventory, Delivery & Lifecycle Information:

TE Connectivity:

1385224-2