THIS DRAWING IS UNPUBLISHED. RELEASED FOR PUBLICATION 2003
© COPYRIGHT 2003 - ALL RIGHTS RESERVED.

LOC	DIST
1	-

REVISIONS

P	LTR	DESCRIPTION	DATE	DWN	APVD
	A12	ECR-16-016334	17NOV2016	FV	RR
	A13	ECR-17-009651	19JUL2017	RS	DC
	A14	REVISED PER ECR-18-017204	23NOV2018	BW	DC

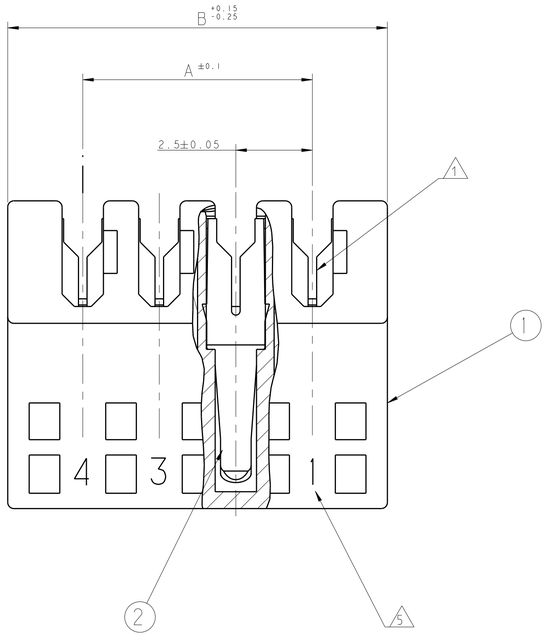

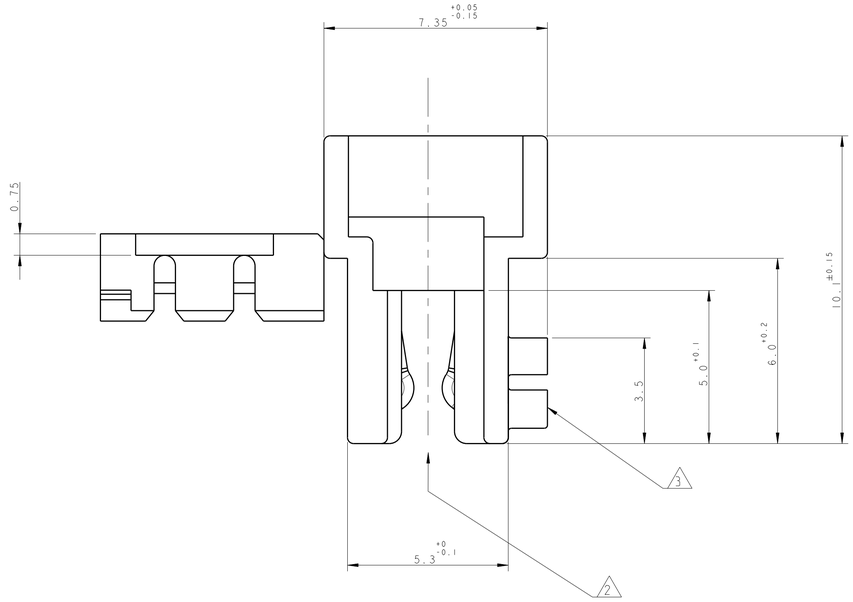

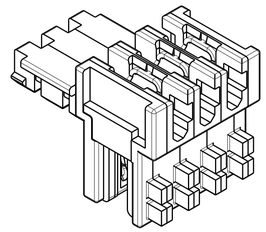

P/N 0-284930-3 AS SHOWN

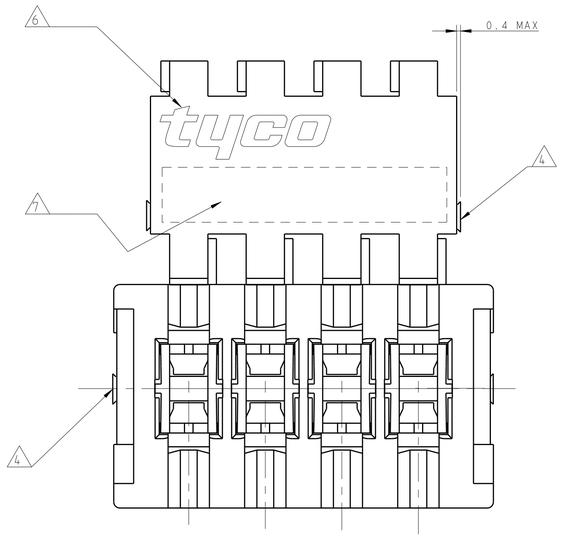

1. WIRE RANGE : STRANDED 0.22-0.35 mm^2 (INS. DIA. 1.30±0.1)
2. MATING PART: TAB HEADER P/Ns 1971817, 1971818 AND EQUIVALENT;
   PCB FRAME P/N 964575 (PCB THK 1.5±0.14 COPPER CLADDING INCLUDED)
   SEE PRODUCT SPEC. 108-18056 FOR FRAME APPLICATION
3. KEYING RIBS TO BE REMOVED BY TERMINATION MACHINE
4. CUT OFF DIMENSION DUE TO PRODUCTION PROCESS
5. CIRCUIT No. IDENTIFICATION
6. TYCO ELECTRONICS TRADEMARK (OPTIONAL POSITION)
7. TAMPOGRAPHIC COLOUR CODE AREA
   (P/Ns IDENTIFICATION BEFORE CRIMPING)
8. OBSOLETE PARTS: OBSOLETE CIS STREAMLINING PER D.RENAUD/D.SINISI
9. PBT GF
10. PBT GF, UL94-V0 & GWEPT 750 NO-FLAME, NATURAL
11. PRELIMINARY PN NOT FOR PRODUCTION

OBSOLETE	NATURAL	13	30.0	34.9	5x	1-284930-3	-
	-	11	25.0	29.9	6x	1-284930-1	2311501-1
OBSOLETE	NATURAL	10	22.5	27.4	6x	1-284930-0	-
	NATURAL	9	20.0	24.9	7x	284930-9 (11)	-
OBSOLETE	NATURAL	8	17.5	22.4	8x	2-284930-8	-
	-					0-284930-8	2311500-8
	-	7	15.0	19.9	8x	0-284930-7	2311500-7
	BLUE	6	12.5	17.4	10x	2-284930-6	1-2311500-6
	-					0-284930-6	2311500-6
OBSOLETE	NATURAL	5	10.0	14.9	11x	2-284930-5	-
	-					0-284930-5	2311500-5
OBSOLETE	NATURAL	4	7.5	12.4	13x	3-284930-4	-
	RED					2-284930-4	1-2311500-4
	-					0-284930-4	2311500-4
OBSOLETE	NATURAL	3	5.0	9.9	16x	5-284930-3	-
(8) OBSOLETE	BLUE					4-284930-3	-
OBSOLETE	BROWN					3-284930-3	-
	GREEN					2-284930-3	2-2311500-3
	-					0-284930-3	1-2311500-3
	COLOUR CODE	HSG POS	DIM.A	DIM.B		(9) TE P/N	(10) TE P/N

Q.TY	MATERIAL	DESCRIPTION	ITEM
-	-	-	-
SEE TABLE	PH. BRONZE, TIN PLATED	IDC RECEPTACLE CONTACT	2
	PBT GLASS FIBER FILLED	FEMALE HOUSING	1
1	REVISIONE DELL'ASSEMBLATO (REVISION OF EACH ASSY NO)		
Q.TA' PER ASSEMBLATO (QTY REQ'D PER ASSY)	ELENCO DEI COMPONENTI (PARTS LIST)		

THIS DRAWING IS A CONTROLLED DOCUMENT.

DIMENSIONS: mm

TOLERANCES UNLESS OTHERWISE SPECIFIED:
0 PLC ±0.2
1 PLC ±0.2
2 PLC ±0.2
3 PLC ±-
4 PLC ±-
ANGLES ±1°

MATERIAL: SEE TABLE
FINISH: - -

DWN R. FABRIS 27FEB2004
CHK - -
APVD G. TURCO 27FEB2004
PRODUCT SPEC 108-18056
APPLICATION SPEC 114-18049-1
WEIGHT -

TE Connectivity

NAME: DUOPLUG 2.5 FEMALE CONNECTOR STANDARD VERSION (FULLY LOADED)

SIZE	CAGE CODE	DRAWING NO	RESTRICTED TO
A1	00779	C-284930	-

CUSTOMER DRAWING

SCALE	SHEET	OF	REV
5:1	1	1	A14

4805 (3/11)